ЭЛЕМЕР
ELEMER

Scientific and Production Company

MEASUREMENT PRESSURE TRANSMITTER
AIR - 20/M2-H

User Manual
NKGZH.406233.054RE

CONTENT

1 Introduction…….. 3

2 Description and operation……. 3

2.1 Product designation……..…….. 3

2.2 Specifications……..……..……. 10

2.3 Explosion protection……..…….22

2.4 Structure and function……..…….……24

2.5 Marking…….…….……. 56

2.6 Packaging……..……..……. 57

3 Product intended use…….……. 58

3.1 Product preparation for use….……..……..…… 58

3.2 Product use……..……..... 71

4 Verification procedure……....…… 72

5 Maintenance…….…….…… 73

6 Storage……..……. 75

7 Transportation…….…….. 75

8 Disposal ……..…….. 75

Appendix A. Overall, connection and mounting dimensions of measurement pressure transmitters AIR-20/M2-H……. 76

Appendix B Example identification record when ordering……. 92

Appendix C Universal command list for AIR-20/M2-H…….…… 107

1 INTRODUCTION

The User manual provides details of design, operating principles, specifications of measurement pressure transmitters AIR-20/M2-H (hereinafter - AIR-20/M2-H), listed in Table 2.7, and instructions necessary for proper and safe operation of transmitters.

2 DESCRIPTION AND OPERATION

2.1 Product designation

2.1.1 AIR-20/M2-H is intended for continuous transformation of values of excess pressure, expansion pressure, excess expansion pressure, absolute pressure, pressure differential and hydrostatic pressure (level) of liquid and gas, including corrosion environment, gaseous oxygen and oxygen-containing gas mixtures in 4-20 mA or 4-20 mA and 0-5 mA unified output current signal simultaneously and in HART-compliant digital signal.

AIR-20/M2-H are used in automatic monitoring and control and process control systems.

AIR-20/M2-H are available in six configurations: AIR-20/M2-H-AP, AIR-20/M2-H-EP, AIR-20/M2-H-ExpP, AIR-20/M2-H-EEP, AIR-20/M2-H-DP, AIR-20/M2-H-HP that are different with a measured parameter according to Table 2.7.

AIR-20/M2-H have configurations specified in Tables 2.1, 2.2, and 2.3.

Table 2.1 - Configuration type

Version	Version code	Order code
General purpose industrial configuration	-	-
Atomic (enhanced reliability)	A	A
Atomic (enhanced reliability) explosion-proof	AEx	AEx
Explosion-proof “Intrinsic safety"	Ex	Ex
Explosion-proof “Explosion proof enclosure” *	Exd	Exd
Explosion-proof “Explosion proof enclosure” and “Intrinsic safety"	Exdia	Exdia
Oxygen *	-	O_2
Note - * In accordance with Table 2.15.		

Table 2.2 - Housing configuration code

Indication type	Configuration code for indication availability and housing type when ordering	
	AH-02* (single-section)	AH-03* (two-section)
Built-in liquid crystal display (LCD) without backlit, cover without window	A2	A3
Optic liquid crystal display, cover with window	A2I1	A3I1
Red LED indicator (LED indicator), cover with window (I2)	A2I2	A3I2
Green LED indicator (LED indicator), cover with window (I3)	A2I3	A3I3
White LED indicator (LED indicator), cover with window (I4)	A2I4	A3I4
Note - * AH-02 and AH-03 housing can have Exd version		

Table 2.3 - Housing configuration for different models

Model code	Configuration code when ordering	Basic configuration
1xx, 2xx, 3xx	A2 A2I1, A2I2, A2I3, A3, A3I1, A3I2, A3I3, A2I4, A3I4	A2
4x0, 5x0, 6x0	A3 A3I1, A3I2, A3I3, A3I4	A3

2.1.2 In accordance with GOST 22520-85 AIR-20/M2-H are:

- in a number of converted input signals - single channel;
- in a number of output signals - dual-channel (unified current signal and HART-compliant digital signal);
- depending on the output signal from the input - with linear dependence (increasing / decreasing) or square rooting function in accordance with Table 2.4;
- when possible resetting of a measurement range – multirange, adjustable.

Table 2.4 - Output signal code

Code when ordering	Output signal	Dependence of the output signal from the input
42	4-20 mA	linear, increasing
42√	4-20 mA	root extracting, increasing
24√	20-4 mA	root extracting, decreasing
24	20-4 mA	linear, decreasing
05	4-20 / 0-5 mA	linear, increasing
05√	4-20 / 0-5 mA	root extracting, increasing
50√	20-4 / 5-0 mA	root extracting, decreasing
50	20-4 / 5-0 mA	linear, decreasing

2.1.3 AIR-20/M2-H can be connected via HART-modem to a personal computer (hereinafter - PC) over HART-protocl for configuration, calibration and measuring data reception during operation.

HARTconfig tool is used for interaction between AIR-20/M2-H and PC.

AIR-20/M2-H configuration procedure includes:

- Value changes in upper and lower measurement range;
- selection of output signal depending on the input (linear or root extracting, increasing or decreasing);
- selection of damping time;
- selection of measurement units.

2.1.4 Upper and lower measurement ranges are measured in Pa, kPa, mPa, kgf / cm^2, kgf / m^2, atm, Mbar, bar, mmHg, mm w.g., while only kPa , mPa, kgf / cm^2 are displayed on the indicator.

2.1.5 AIR-20Ex/M2-H, AIR-20Ax/M2-H explosion-proof transmitters meet the requirements of GOST 30852.0-2002,GOST 30852.10-2002 and have explosion protection type intrinsic safety of “ia” level and Ex 1ExdIICT6 explosion proof mark.

AIR-20Ex/M2-H, AIR-20AEx/M2-H explosion-proof transmitters are intended for use in explosion hazard zones in accordance with the set explosion proof mark, requirements of TR CU 012/2011, GOST 30852.0-2002, GOST 30852.10-2002, and other normative documents, regulating electrical equipment use in hazardous areas wherein IIA, IIB, IIC categories, T1 - T6 groups explosive mixtures may be appeared.

Explosion-proof transmitters AIR-20Exd/M2-N have protection type “explosion-proof enclosure ‘d’” with parameters corresponding to gas mixtures and vapors with air IIC category according to GOST 30852.1-2002, 1ExdIICT6 X has explosion proof mark Ex and can be used in hazardous areas according to TR CU 012/2011, GOST 30852.0-2002, GOST 30852.1-2002.

2.1.6 AIR-20A/M2-H, AIR-20AEx/M2-H (high reliability) are used in process control systems of nuclear power stations (NP) and the open nuclear fuel cycle facilities (NPS).

2.1.7 AIR-20A/M2-H, AIR-20AEx/M2-H, in accordance with GOST 25804.1-83, are referred to:

- by nature of application to B category (equipment of the continuous application);
- in a number of performance levels to type I - equipment with two performance levels: nominal level and refusal.

2.1.8 By resistance to mechanical stress when in service AIR-20A/M2-H, AIR-20AEx/M2-H refer to M6 group version as per GOST 17516.1-90.

2.1.9 AIR-20A/M2-H, AIR-20AEx/M2-H refer to seismic category I as per DR-031-01 and group B of version 3 as per 3 RD 25 818-87.

2.1.10 In accordance with GOST 25804.3-83 (depending on location) AIR-20A/M2-H, AIR-20AEx/ M2-H are resistant, durable and resistant to earthquakes with the level of seismicity:

- 8 points on MSK-64 scale above ground level over 40 m;
- 9 points on MSK-64 scale above ground level over 70 m;

2.1.11 AIR-20A/M2-H, AIR-20AEx/M2-H (enhanced reliability) in accordance with the DR - 001 - 97 (GSR - 88/97), DR-016-05 (GSR ONFC) refer to elements NP and ONFC safety class 2, 3, or 4:

- by intended use - to normal operation components;
- by safety impact - to safety-related components;
- by nature of executed functions - to control elements.

Examples of classification designation: 2, 2NC, 2C, 2 N, 3 3NC, 3C, 3N, 4.

2.1.12 By resistance to electromagnetic interference AIR-20A/M2-H, AIR-20Exd/M2-H correspond to TR CU 020/2011, GOST 32137-2013, and Table 2.5.

2.1.12.1 By resistance to electromagnetic interference AIR-20A/M2-H, AIR-20Ex/M2-H correspond to TR CU 020/2011, GOST 32137-2013, and Table 2.5.

Table 2.5 - Resistance to electromagnetic interference of AIR-20A/M2-H

Stifness degree of electromagnetic environment as per	Interference type specification	Value	Configuration group and performance factors in accordance with GOST 32137-2013
3 GOST R 51317.4.5-99	Microsecond high energy pulse (MHEP): - Interference submission per “wire-to-ground“ circuit	2 kV	IVA*
2 GOST R 51317.4.5-99	Microsecond high energy pulse (MHEP): - Interference submission per “wire-to-wire“ circuit	1 kV	IVA*
4 GOST 30804.4.4-2013	Electrical fast transient (EFT): - Input-output circuits	2 kV	IVA
4 GOST 30804.4.4-2013	Electrical fast transient (EFT): - feed circuit	2 kV	IVA**
4 GOST 30804.4.2-2013	Electrostatic discharge: - Contact discharge	8 kV	IVA***
	- Air discharge	15 kV	
3 GOST 30804.4.3-2013	Radio-frequency electromagnetic fields in frequency range: - 80-1000 MHz	10 V/m	IVA
	- 800-960 MHz	30 V/m	IVA
3 GOST R 51317.4.6-99	Conducted interference in frequency range 0.15-80 MHz	10 V	IVA
5 GOST R 50648-94	Power frequency magnetic field long magnetic field	40 A/m	IVA
5 GOST R 50648-94	Power frequency magnetic field transient magnetic field 3 s	600 A/m	IVA
GOST 30805.22-2013	Man-made interference emission at a distance of 10 m: in frequency range 30-230 MHz	40 dB	Suitable for TC **** Class A[*5]
GOST 30805.22-2013	Man-made interference emission to the environment at a distance of 10 m: in frequency range 230-1000 MHz	47 dB	Suitable for TC **** Class A[*5]

Note

1 - * Under MHEP influence current inrush is possible in their impact.

2 - ** Under EFT influence current deviation of 3.0% is possible from output signal range.

3 - *** Under electrostatic charges influence current deviation of 1.5 % is possible from output signal range.

4 - **** TM - technical means.

5 - [*5]Class A - equipment category according to GOST 30805.22-2013.

6 AIR-20/M2-H normally operate and do not interfere in combined action conditions with equipment of systems and elements for which they are intended, as well as with equipment for other purposes, that can be used in conjunction with AIR-20/M2-H data in a typical interference situation.

Table 2.5.1- Resistance to electromagnetic interference of AIR-20/M2-H, AIR-20Ex/M2, AIR-20Exd/M2, AIR-20AEx/M2

Stifness degree of electromagnetic environment as per	Interference type specification	Value	Configuration group and performance factors in accordance with GOST 32137-2013
3 GOST R 51317.4.5-99	Microsecond high energy pulse (MHEP): - Interference submission per “wire-to-ground“ circuit	2 kV	IIIA*
2 GOST R 51317.4.5-99	Microsecond high energy pulse (MHEP): - Interference submission per “wire-to-wire“ circuit	1 kV	IIIA*
4 GOST 30804.4.4-2013	Electrical fast transient (EFT): - Input-output circuits	2 kV	IIIA
4 GOST 30804.4.4-2013	Electrical fast transient (EFT): - feed circuit	2 kV	IIIA
4 GOST 30804.4.2-2013	Electrostatic discharge: - Contact discharge	8 kV	IIIA
	- Air discharge	15 kV	
3 GOST 30804.4.3-2013	Radio-frequency electromagnetic fields in frequency range: - 80-1000 MHz	10 V/m	IVA
	- 800-960 MHz	30 V/m	IVA
3 GOST R 51317.4.6.-99	Conducted interference in frequency range 0.15-80 MHz	10 V	IVA
5 GOST R 50648-94	Power frequency magnetic field long magnetic field	40 A/m	IVA
5 GOST R 50648-94	Power frequency magnetic field transient magnetic field 3 s	600 A/m	IVA
GOST 30805.22-2013	Man-made interference emission to the environment at a distance of 10 m: in frequency range 30-230 MHz	40 dB	Suitable for TC ** Class A***
GOST 30805.22-2013	Man-made interference emission to the environment at a distance of 10 m: in frequency range 230-1000 MHz	47 dB	Suitable for TC ** Class A***

Note

1 - * Under MHEP influence current inrush is possible in their impact.

2 - ** TM - technical means.

3 - *** Class A - equipment category according to GOST 30805.22-2013.

4 AIR-20/M2-H normally operate and do not interfere in combined action conditions with equipment of systems and elements for which they are intended, as well as with equipment for other purposes that can be used in conjunction with AIR-20/M2-H data in a typical interference situation.

2.1.13 AIR-20/M2-H by environment immunity as per:

- GOST 15150-69 - made by version T II;
- GOST 14254-96 - have protection degree against ingestion of IP54 or IP65 dust and water transmitters (depending on electrical connector options, see Table B.1 of Appendix B).

2.1.14 AIR 20 / M2-H are resistant to climate effects when used in accordance with Table 2.6.

LCD indictors are resistant to -30 ... +60 °C ambient temperature; LED indicators are resistant to -55... +80°C.

LCD use in other temperature ranges does not result in its damage.

Table 2.6 - Climatic configuration

Type	Group	GOST	Temperature range in service	Code when ordering
-	C2	R 52931-2008	- 40... +70 °C	t4070*
			- 60... +70 °C	t6070*
			- 55... +70 °C	t5570*
			- 50... +70 C	t5070***
	C3		- 10... +70 °C	t1070
			- 25... +70 °C	T2570 C3
T3	-	15150-69	- 25... +80 °C	t2580
			- 25... 70 °C	t2570 C3
Boreal climate. 3.1	-		- 25... +70 °C	t2570 Boreal climate.3.1

NOTE

1 - * Except 5x0, 6x0 models and 162, 165, 173, 175, 362, 365 models with material configuration code 13P.

2 - ** Upon request (only for material configuration 61N, see Tables 2.14, 2.16.).

3 - *** Upon request, only for material configuration code 12N, 16N, 61N.

4 - For oxygen configuration sensors - from - 25 °C.

2.2. Specifications

2.2.1 Modification, configuration, model code, maximum upper measurement limit P_{BMAX}, series of upper measurement limits P_B, maximum (testing) pressure R_{test} and acceptable operating excess pressure $ROP_{OVEERPR.}$ correspond to the data indicated in Table 2.7. Limits of basic percentage errors, expressed in percent from full scale range correspond to the data indicated in Tables 2.8 and 2.9.

2.2.1.1 Model Code consists of 3 digits.

The first represents the type of measured pressure:
- “0” - absolute pressure;
- “1” - excess pressure;
- “2” - expansion pressure;
- “3” – excess expansion pressure;
- “4” - pressure differential;
- “5” - hydrostatic pressure ("immersion" variant);
- “6” - hydrostatic pressure (“flange" variant).

The second digit represents the code of maximum upper limit (range) in accordance with Table 2.7.

The third digit represents sensor version and fitting version:
- “0” - sensor with metal membrane;
- “1” - sensor with metal membrane, “open membrane” version;
- “2” - sensor with ceramic membrane, “half-open membrane” version;
- “5” - sensor with ceramic membrane;
- “9” - sensor with separation membrane.

2.2.1.2 The limits of the basic percentage errors of AIR-20/M2-N with output signal of 0-5 or 5-0 mA correspond to B or C accuracy grade.

NOTE - AIR-20/M2-H of accuracy grade A for 0-5 or 5-0 mA output signal can be manufactured upon cutomert’s request.

Table 2.7

Measured parameter, modification and configuration	Model code	Upper limit (of measurement range) digits, readjustment range (P_B: R_{BMAX}) and series of upper measurement limits (ranges)										P_{test}	$P_{OPER.OVERPR.}$
		1 (P_{BMAX})	2	3	4	5	6	7	8	9	10		
		1:1	1:1.6	1:2.5	1:4	1:6	1:10	1:16	1:25	1:40	1:60		
Absolute pressure AIR-20/M2-H-AP AIR-20Ex/M2-H-AP AIR-20A/M2-H-AP AIR-20AEx/M2-H-AP AIR-20Exd/M2-H-AP AIR-20Exdia/M2-H-AP	080	16 MPa	10 MPa	6.0 MPa	4.0 MPa	2.5 MPa	1.6 MPa	1.0 MPa	0.6 MPa	-	-	40 MPa	-
	070 071	6.0 MPa	4.0 MPa	2.5 MPa	1.6 MPa	1.0 MPa	0.6 MPa	0.4 MPa	0.25 MPa	-	-	25 MPa	-
	060,0 61	2.5 MPa	1.6 MPa	1.0 MPa	0.6 MPa	0.4 MPa	0.25 MPa	0.16 MPa	0.10 MPa	-	-	10 MPa	-
	050,0 51	600 kPa	400 kPa	250 kPa	160 kPa	100 kPa	60 kPa	40 kPa	25 kPa	-	-	2500 kPa	-
	045	400 kPa	250 kPa	160 kPa	100 kPa	60 kPa	40 kPa	25 kPa	16 kPa	-	-	2500 kPa	-
	040,0 41	250 kPa	160 kPa	100 kPa	60 kPa	40 kPa	25 kPa	16 kPa	10 kPa	-	-	1000 kPa	-
	030,0 31 032 035	100 (110)* kPa	60 kPa	40 kPa	25 kPa	16 kPa	10 kPa	6.0 kPa	4.0 kPa	-	-	400, 1000** kPa	-
	015	20 kPa	16 kPa	10 kPa	6.3 kPa	4.0 kPa	2.5 kPa	1.6 kPa	1.0 kPa	-	-	600 kPa	-
Overpressure AIR-20/M2-H-EP AIR-20Ex/M2-H-EP AIR-20A/M2-H-EP AIR-20AEx/M2-H-EP AIR-20Exd/M2-H-EP AIR-20Exdia/M2-H-EP	190E	100 MPa	60 MPa	40 MPa	25 MPa	16 MPa	10 MPa	6.0 MPa	4.0 MPa	2.5 MPa	1.6 MPa	150 MPa	-
	190	60 MPa	40 MPa	25 MPa	16 MPa	10 MPa	6.0 MPa	4.0 MPa	2.5 MPa	1.6 MPa	1.0 MPa	150, 70*** MPa	-
	180	16 MPa	10 MPa	6.0 MPa	4.0 MPa	2.5 MPa	1.6 MPa	1.0 MPa	0.6 MPa	0.4 MPa	0.25 MPa	40, 25*** MPa	-
	170 171 172 175 179	6.0 MPa	4.0 MPa	2.5 MPa	1.6 MPa	1.0 MPa	0.6 MPa	0.4 MPa	0.25 MPa	0.16 MPa	0.1 MPa	25, 20**, 9*** MPa	-
	160 161 162 165,1 69	2.5 MPa	1.6 MPa	1.0 MPa	0.6 MPa	0.4 MPa	0.25 MPa	0.16 MPa	0.1 MPa	0.06 MPa	0.04 MPa	10, 6**, 4*** MPa	-
	150 151 152 155	600 kPa	400 kPa	250 kPa	160 kPa	100 kPa	60 kPa	40 kPa	25 kPa	16 kPa	10 kPa	2500, 2500**, 900***	-
	142 145	400 kPa	250 kPa	160 kPa	100 kPa	60 kPa	40 kPa	25 kPa	16 kPa	10 kPa	6.0 kPa	2500 kPa	-
	140 141 149	250 kPa	160 kPa	100 kPa	60 kPa	40 kPa	25 kPa	16 kPa	10 kPa	6.0 kPa	4.0 kPa	1000 kPa	-
	130 131 132 135	100 kPa	60 kPa	40 kPa	25 kPa	16 kPa	10 kPa	6.0 kPa	4.0 kPa	2.5 kPa	1.6 kPa	400, 1000** kPa	-

Table 2.7 continued

Measured parameter, modification and configuration	Model code	Upper limit (of measurement range) digits, readjustment range (P_B: R_{BMAX}) and series of upper measurement limits (ranges)										P_{test}	$P_{OPER.OVERPR.}$
		1 (P_{BMAX})	2	3	4	5	6	7	8	9	10		
		1:1	1:1.6	1:2.5	1:4	1:6	1:10	1:16 AM	1:25 AM	1:40 AM	1:60		
Overpressure AIR-20/M2-H-EP AIR-20Ex/M2-H-EP AIR-20A/M2-H-EP AIR-20AEx/M2-H-EP AIR-20Exd/M2-H-EP AIR-20Exdia/M2-H-EP	120 121 122 125	40 kPa	25 kPa	16 kPa	10 kPa	6.0 kPa	4.0 kPa	2.5 kPa	1.6 kPa	1.0 kPa	0.6 kPa	200, 600** kPa	-
	110 115 112	10 kPa	6.0 kPa	4.0 kPa	2.5 kPa	1.6 kPa	1.0 kPa	0.6 kPa	0.4 kPa	0.25 kPa	0.16 kPa	200, -30/400** kPa	-
	105 102	4 kPa	2.5 kPa	1.6 kPa	1.0 kPa	0.6 kPa	0.4 kPa	0.25 kPa	0.16 kPa	-	-	-30/400 kPa	-
Expansion pressure AIR-20/M2-H-ExpP AIR-20Ex/M2-H-ExpP AIR-20A/M2-H-ExpP AIR-20AEx/M2-H-ExpP AIR-20Exd/M2-H-ExpP AIR-20Exdia/M2-H-ExpP	230 235	100 kPa	60 kPa	40 kPa	25 kPa	16 kPa	10 kPa	6.0 kPa	4.0 kPa	2.5 kPa	1.6 kPa	400, 1000** kPa	-
	212 215	10 kPa	6.0 kPa	4.0 kPa	2.5 kPa	1.6 kPa	1.0 kPa	0.6 kPa	0.4 kPa	-	-	-30/400 kPa	-
Excess expansion pressure AIR-20/M2-H-EEP AIR-20Ex/M2-H-EEP AIR-20A/M2-H-EEP AIR-20AEx/M2-H-EEP AIR-20Exd/M2-H-EEP AIR-20Exdia/M2-H-EEP	360 361 362 365,369	-0.1 MPa	-0.1 MPa	-0.1 MPa	-0.1 MPa	-0.1 MPa	-0.1 MPa	-0.1 MPa	-0.05 MPa	-0.03 MPa	-0.02 MPa	10, 6**, 4*** MPa	-
		2.4 MPa	1.5 MPa	0.9 MPa	0.5 MPa	0.3 MPa	0.15 MPa	0.06 MPa	0.05 MPa	0.03 MPa	0.02 MPa		
	350 351 359	-100 kPa	-100 kPa	-100 kPa	-100 kPa	-50 kPa	-30 kPa	-20 kPa	-12.5 kPa	-8.0 kPa	-5.0 kPa	2500, 1000** kPa	-
		500 kPa	300 kPa	150 kPa	60 kPa	50 kPa	30 kPa	20 kPa	12.5 kP	8.0 kPa	5.0 kPa		
	340 341 345 342	-100 kPa	-100 kPa	-50 kPa	-30 kPa	-20 kPa	-12.5 kPa	-8.0 kPa	-5.0 kPa	-3.0 kPa	-2.0 kPa	1000 kPa	-
		150, 100** kPa	60 kPa	50 kPa	30 kPa	20 kPa	12.5 kPa	8.0 kPa	5.0 kPa	3.0 kPa	2.0 kPa		
	320	-20 kPa	-12.5 kPa	-8.0 kPa	-5.0 kPa	-3.0 kPa	-2.0 kPa	-1.25 kPa	-0.8 kPa	-0.5 kPa	-0.3 kPa	-50/100 kPa	-
		20 kPa	12.5 kPa	8.0 kPa	5.0 kPa	3.0 kPa	2.0 kPa	1.25 kPa	0.8 kPa	0.5 kPa	0.3 kPa		
	310 312 315	-8.0 kPa	-5.0 kPa	-3.0 kPa	-2.0 kPa	-1.25 kPa	-0.8 kPa	-0.5 kPa	-0.3 kPa	-0.2 kPa	-0.125 kPa	-50/100, -30/400** kPa	-
		8.0 kPa	5.0 kPa	3.0 kPa	2.0 kPa	1.25 kPa	0.8 kPa	0.5 kPa	0.3 kPa	0.2 kPa	0.125 kPa		
	302 305	-2.5 kPa	-2.0 kPa	-1.25 kPa	-0.8 kPa	-0.5 kPa	-0.3 kPa	-0.2 kPa	-0.125 kPa	-	-	-30/100 kPa	-
		2.5 kPa	2.0 kPa	1.25 kPa	0.8 kPa	0.5 kPa	0.3 kPa	0.2 kPa	0.125 kPa	-	-		
Pressure differenital AIR-20/M2-H-DP AIR-20Ex/M2-H-DP AIR-20A/M2-H-DP AIR-20AEx/M2-H-DP AIR-20Exd/M2-H-DP AIR-20Exdia/M2-H-DP	470	16 MPa	10 MPa	6.0 MPa	4.0 MPa	2.5 MPa	1.6 MPa	1.0 MPa	0.6 MPa	0.4 MPa	0.25 MPa	-	25 MPa
	460	2.5 MPa	1.6 MPa	1.0 MPa	0.63 MPa	0.4 MPa	0.25 MPa	0.16 MPa	0.1 MPa	0.063 MPa	0.04 MPa	-	16, 25 MPa
	440	250 kPa	160 kPa	100 kPa	63 kPa	40 kPa	25 kPa	16 kPa	10 kPa	6.3 kPa	4.0 kPa	-	16, 25, 40 MPa

Table 2.7 continued

Measured parameter, modification and configuration	Model code	Upper limit (of measurement range) digits, readjustment range (P_B: R_{BMAX}) and series of upper measurement limits (ranges)										P_{test}	$P_{OPER.OVERPR.}$
		1 (P_{BMAX})	2	3	4	5	6	7	8	9	10		
		1:1	1:1.6	1:2.5	1:4	1:6	1:10	1:16 AM	1:25 AM	1:40 AM	1:60		
Pressure differential AIR-20/M2-H-DP AIR-20Ex/M2-H-DP AIR-20A/M2-H-DP AIR-20AEx/M2-H-DP AIR-20Exd/M2-H-DP AIR-20Exdia/M2-H-DP	420	40 kPa	25 kPa	16 kPa	10 kPa	6.3 kPa	4.0 kPa	2.5 kPa	1.6 kPa	1.0 kPa	0.63 kPa	-	16, 25, 40 MPa
	410	10 kPa	6.3 kPa	4.0 kPa	2.5 kPa	1.6 kPa	1.0 kPa	0.63 kPa	0.4 kPa	0.25 kPa	0.16 kPa	-	10 MPa
	400	1.6 kPa	1.0 kPa	0.63 kPa	0.4 kPa	0.25 kPa	0.16 kPa	0.1 kPa	0.063 kPa	-	-	-	4 MPa
Hydrostatic pressure (level) AIR-20/M2-H-HP AIR-20Ex/M2-H-HP AIR-20A/M2-H-HP AIR-20AEx/M2-H-HP	540	250 kPa	160 kPa	100 kPa	60 kPa	40 kPa	25 kPa	16 kPa	10 kPa	6.0 kPa	4.0 kPa	1000 kPa	-
	530	100 kPa	60 kPa	40 kPa	25 kPa	16 kPa	10 kPa	6.0 kPa	4.0 kPa	2.5 kPa	1.6 kPa	400 kPa	-
	520	25 kPa	16 kPa	10 kPa	6.0 kPa	4.0 kPa	2.5 kPa	1.6 kPa	1.0 kPa	-	-	200 kPa	-
	640	250 kPa	160 kPa	100 kPa	63 kPa	40 kPa	25 kPa	16 kPa	10 kPa	6.3 kPa	4.0 kPa	-	4 MPa
	620	40 kPa	25 kPa	16 kPa	10 kPa	6.3 kPa	4.0 kPa	2.5 kPa	1.6 kPa	1.0 kPa	0.63 kPa	-	4 MPa

NOTE
1 - * Upon request, only for models 030, 031.
2 - ** For models xx2 and xx5.
3 - *** For models with material configuration code 61N.
4 - Sign "-" represents negative pressure.
5 - Low range limit is zero.
6 - Models with material configuraion code 15x and 17x are made only for $\frac{P_B}{P_{BMAX}} \geq \frac{1}{6}$ (have only 5 upper range limits).
7. AIR-20/M2-H-DP can be manufactured with negative low range limit upon customer's request.

Table 2.8 - For all models except xx5, xx2, 5x0.

Order code	Accuracy grade code	Limits of the basic percentage error γ, %, For digits of measurement limits (ranges)									
		1	2	3	4	5	6	7	8	9	10
A0*	A00*	±0,075	±0,075	±0,1	±0,15	±0,2	±0,3	±0,4	±0,5	±0,8	±1,2
A**	A01**	±0,1	±0,1	±0,1	±0,15	±0,2	±0,3	±0,4	±0,5	±0,8	±1,2
B***	B02***	±0.2	±0,2	±0,2	±0,3	±0,4	±0,6	±0,8	±1,0	±1,5	±2,5
C	C05	±0,5	±0,5	±0,5	±0,5	±0,8	±1,0	±1,5	±2,0	±3,0	±5,0

NOTE
1 - * Only for models 030, 050, 060, 130, 140, 150, 160, 170, 180, 190, 340, 350, 360, 420, 440 with material configuration code 12x and models 150, 160, 170, 180 , 190, 350, 360 with material configuration code 61N.
2 - ** Except models 121, 230, 231, 470, 400 and models with material configuration code 15x, 16x, 17x.
3 - *** Except models with material configuration code 15x и 17x.
4 - For any upper P_B and lower $P_H > 0$ limits the error γ_1 is calculated by the formula $\gamma_1 = \gamma \cdot P_B/(P_B - P_H)$, where γ represents the error determined by upper limit value P_B in accordance with the Table.
5 - The basic error is defined in the sub-range from 2 to 100% of the range and meets γ for sensors with root extracting dependence.

Table 2.9 - For models xx5, xx2 и 5x0.

Order code	Accuracy grade code	Limits of the basic percentage error γ, %, For digits of measurement limits (ranges)									
		1	2	3	4	5	6	7	8	9	10
A*	A01**	0.1	0.1	0.15	0.25	0.4	0.6	0.8	1.0	1.5	2.5
B**	B02***	0.2	0.2	0.3	0.5	0.8	1.0	1.2	1.5	2.5	3.5
C	C05	0.5	0.5	0.5	0.8	1.0	1.2	1.5	2.0	3.0	5.0

NOTE
1 - * Except models 015, 105, 102, 115, 112, 235, 215, 212, 315, 312, 305, 302, 175, 172.
2 - 015 ** Except models 175, 172.
3 - For any upper P_B and lower $P_H > 0$ limits the error γ_1 is calculated by the formula $\gamma_1 = \gamma \cdot P_B/(P_B - P_H)$, where γ - error determined by upper limit value P_B in accordance with the Table.
4 - The basic error is defined in the sub-range from 2 to 100% of the range and meets γ for sensors with root extracting dependence.

2.2.2 Ranges of standardized output signals:
- 4-20 mA or 0-5 and 20-4 and 5-0 mA.
2.2.3 Nominal static characteristic of AIR-20/M2-H:

- with linear increasing dependence corresponds to the type

$$I = \frac{P - P_H}{P_B - P_H} \cdot (I_B - I_H) + I_H, \qquad (2.1)$$

- with linear decreasing dependence corresponds to the type

$$I = \frac{P - P_H}{P_B - P_H} \cdot (I_H - I_B) + I_B, \qquad (2.2)$$

- with root extracting increasing dependence corresponds to the type

$$I = \sqrt{\frac{P - P_H}{P_B - P_H}} \cdot (I_B - I_H) + I_H, \qquad (2.3)$$

- with root extracting decreasing dependence corresponds to the type

$$I = \sqrt{\frac{P - P_H}{P_B - P_H}} \cdot (I_H - I_B) + I_B, \qquad (2.3.1)$$

where I - current output signal value corresponding to the measured pressure, mA;

I_B and I_H - upper and lower limit output signal values, mA;

P_B and R_H - upper and lower measurement limits of pressure for all AIR-20/M2-H, except AIR-20/M2-H-EEP;

P - value of the measured pressure in the same units as for P_U and P_L

For AIR-20/M2-H-EEP, P_B represents upper range limit of excess pressure, P_H represents upper range limit of negative pressure, with a minus sign;

P - value of the measured pressure, have a plus sign when excess pressure is measured and the minus sign when negative pressure is measured.

2.2.3.1 Nominal static characteristic of AIR-20/M2-H for HART-protocol digital output signal:

- for digital signal “pressure” corresponds to the type

$$A = P, \qquad (2.4)$$

where A – pressure value transmitted over HART-protocol;

- for the digital signal “percentage of the range” with linear dependence corresponds to the type

$$A_{\%} = 100 \cdot \frac{P - P_H}{P_B - P_H}, \qquad (2.5)$$

where $A_{\%}$ – pressure value in percentage of the range transmitted over HART-protocol;

- for the digital signal “percentage of the range” with root extracting dependence corresponds to the type

$$A_{\%} = 100 \cdot \sqrt{\frac{P - P_H}{P_B - P_H}} \qquad (2.6)$$

- for digital signal “current loop” corresponds to the type

$$A_I = I \qquad (2.7)$$

where A_I - output current value of 4-20 mA, transmitted over HART-protocol;

I - output current value of 4-20 mA, calculated according to formulae 2.1, 2.2, 2.3, 2.3.1.

2.2.4 Output signal variation is less than, %. 0.5 $|\gamma|$.

2.2.5 AIR-20/M2-H are proof against high frequency sinusoidal vibrations and correspond to:

<u>For models 1xx, 2xx, 3xx</u>

- to vibration-proof version - V2 group according to GOST 52931-2008
  - frequency (10…150) Hz;
  - Displacement amplitude for frequency lower than the frequency of Transition 0.15 mm;
  - Acceleration amplitude for frequencies above the frequency of Transition 19.6 m/s^2.

<u>For models 4xx, 5xx, 6xx</u>

- to vibration-proof version - N4 group according to GOST 52931-2008

- frequency (5…80) Hz;
- Displacement amplitude for frequency lower than the frequency of Transition 0.15 mm;
- Acceleration amplitude for frequencies above the frequency of Transition
  19.6 m/s^2.

Limit of allowable additional error of AIR-20/M2-N during vibration effect does not exceed the limit of allowable basic error.

2.2.6 Value variation of output signal of AIR-20/M2-H-DP and AIR-20/M2-H-640 HP of models 640, 620 caused by change in the operating excess pressure in range from zero to maximum permissible and from maximum permissible to zero (see Table 2.7), expressed as a percentage of the output signal variation range does not exceed the value γ_p determined by the formula:

$$\gamma_p = K_p \Delta P_{раб} \cdot \frac{P_{B\max}}{P_B}, \qquad (2.8)$$

where ΔP_{oper} – operating pressure variation, MPa;

P_{Umax}, P_U - maximum upper limit (range) and upper limit (range) respectively for the model AIR-20/M2-H, MPa;

K_P - coefficient in Table 2.10.

Table 2.10 - K_P coefficient depending on models

Model	K_p,%/MPa	
	Accuracy grade code A0, A	Accuracy grade code B, C
470, 460, 440, 420	0.007	0.015
410	0.02	0.04
400, 640	0.2	
620	0.5	

2.2.7 Variation of absolute pressure output signal of AIR-20/H-M2 caused by change in atmospheric pressure by ±10 kPa (75 mmHg) of the final value in the range from 84 to 106.7 kPa (630 to 800 mmHg), expressed as a percentage of the output signal variation range does not exceed 0.2 of basic error limit.

2.2.8 Additional error of AIR-20 /M2-H caused by change in ambient temperature from normal (23±2) °C to any temperature within the range of operating temperatures for every 10 ° C of temperature change, γ_T in %/10 °C, does not exceed the values given in Table 2.11.

Table 2.11 - Additional temperature error

Models	Limits of additional error caused by changes in ambient temperature by 10 °C from normal 20±5 °C, %/10°C:	
	Accuracy grade code A0, A, B	Accuracy grade code C
015	-	$\pm(0{,}05+0{,}20\cdot P_{B\max}/P_B)$
102, 105, 112, 115, 212, 215, 302, 305, 312, 315	$\pm(0{,}04+0{,}12\cdot P_{B\max}/P_B)$	$\pm(0{,}05+0{,}15\cdot P_{B\max}/P_B)$
110, 111, 120, 121, 122, 125	$\pm(0{,}04+0{,}08\cdot P_{B\max}/P_B)$	$\pm(0{,}08+0{,}12\cdot P_{B\max}/P_B)$
Others	$\pm(0{,}03+0{,}05\cdot P_{B\max}/P_B)$	$\pm(0{,}04+0{,}08\cdot P_{B\max}/P_B)$
P_{Umax}, P_U - maximum upper limit (range) and upper limit (range) respectively.		

2.2.9 Additional error of AIR-20/M2-H caused by high humidity effect does not exceed 0.2 of limit of allowable basic error.

2.2.10 Additional error AIR-20/M2-H caused by impact of constant magnetic fields and (or) variable fields of the network (man-made) frequency with intensity up to 400 A/m, does not exceed 0.2 of the limit of allowable basic error.

2.2.11 AIR-20/M2-H power, except AIR-20Ex/M2-H, is carried by the DC source with voltage of 12 V to 42 V when nominal value ($24^{+0,48}_{-0,48}$) V or ($36^{+0,72}_{-0,72}$) V.

When connected to 250 Ohm resistor for HART-protocol the supply voltage is from 18 to 42 V.

Supply voltage is 9 to 42V when using LCD without backlit.

Supply voltage is 14 to 42V when using white LED indicator.

2.2.11.1 Setting time of nominal output voltage of power supply should not exceed 2 seconds.

2.2.12 Power consumed by AIR-20/M2-H does not exceed:

- 0.7 W for 24 V supply voltage;
- 1.0 W for 36 V supply voltage;

2.2.13 Additional error caused by gradual supply voltage deviation from minimum 12 V to maximum 42 value (18 to 42 V with 250 Ohm resistor connected for HART-protocol), does not exceed 0.2 of the limit of allowable basic error.

2.2.14 Load resistance (including resistor resistance required for HART-protocol operation) when using only one channel of output signals and at nominal values of supply voltage should not exceed the values specified in Table 2.12.

Table 2.12 - Load resistance

Output signal, mA	Supply voltage, V	Load resistance no more than, kOhm, for indication variation		
		LCD, without backlit	LED	LCD
4–20 or 20–4	24	0.6	0.5	0.5
	36	1.1	1.0	1.0
0–5 or 5–0	24	3.5	2.9	2.9
	36	5.5	4.9	4.9

2.2.14.1 Maximum load resistance of the output signal of 4-20 mA R_{Hmax}, k, (when using HART-protocol including resistor resistance required for HART-protocol operation) at any power supply voltage in the range from 12 to maximum value of 42 V is calculated by the formula

$$R_{Hmax} = \frac{U - U_{min}}{I_{max}}, \qquad (2.9)$$

where U - power supply voltage, V;

Umin = 12 V (9 V when using LCD without backlit);

I_{max} = 23 mA.

2.2.14.2 Maximum load resistance of the output signal of 0-5 mA R_{Tmax}, kOhm, at any power supply voltage in the range from 12 to a maximum value of 42 V is calculated by the formula 2.9.1.

$$R_{Tmax} = \frac{U - U_T}{I_{max}}, \qquad (2.9.1)$$

where U - power supply voltage, V;

U_T = 6.6 V (9 V when using LCD without backlit);

I_{max} = 6 mA.

2.2.15 When connecting external load with resistance, not exceeding the values specified in paragraph 2.2.14, the basic error AIR-20/M2-H and the output signal variation correspond to requirements of paragraphs 2.2.1 and 2.2.4.

2.2.16 Settling time of transmitter output signal (t_{set}) when stepwise pressure changing, being 90% of the measuring range is determined by the formula

$$t_{уст} = t_{П} + t_{З} \qquad (2.10)$$

where T_T - sensor transition time, s;

T_D - delay time of the electronic unit, s.

Settling time of output signal when stepwise pressure changing is the time since the moment of stepwise pressure change to the moment when the output signal enters a stabilized zone that is different from the upper

value of output signal for 5% of the measuring range.

Sensor transition time ($t_П$) does not exceed:

- 3.0 s - for model 400;
- 0.2 s- for models 4x0 (except model 400), 620, 640;
- 0.1 - for models 1xx, 2xx, 3xx, 5xx;

Dynamic characteristics are normalized at a temperature (23 ± 5) °C and at disconnected electronic output signal damping (damping time 0 s).

Electronic unit delay time is determined by the formula

$$t_З = \tau + 3 \cdot t_Д \qquad (2.11)$$

where $t_Д$ – damping time - time in which (when applying step input supply on the transmitter l) the output signal will reach 63% of conservative value of the output signa;

τ – measuring cycle time of the transmitter 0.1 s.

2.2.17 AIR-20/M2-H of excess pressure, expansion pressure, excess expansion pressure (on excess pressure), absolute pressure have durability and tightness with the test pressure specified in Table 2.7.

AIR-20/M2-H withstands overload respective corresponding test pressure within 15 min.

Transmitters comply with paragraphs 2.2.1 and 2.2.4 after 15 minutes on completing the specified impact.

2.2.18 AIR-20/M2-H-DP and AIR-20/M2-H-640 HP of models 620, 640 stand strength test with test pressure according to GOST 356-80 and leak test with maximum permissible operating excess pressure given in Table 2.7 while maximum allowable operating excess pressure is taking for nominal pressure Py according to GOST 356-80.

2.2.19 AIR-20/M2-H-DP protected against impact of one-sided overload by pressure that is equal to the maximum permissible operating excess pressure, can withstand overload from positive and negative chambers for 1 minute with one-sided impact of pressure that is equal to the maximum permissible operating excess pressure.

2.2.19.1 AIR-20/M2-H-HP of models 640, 620 stand overload by the plus and minus chambers with one-sided influence of pressure which values are specified in Table 2.13.

Table 2.13 - Maximum one-sided pressure

Model	Maximum one-sided pressure, MPa	
	by plus chamber	by minus chamber
620	1	0.5
640	4	2

Transmitters comply with paragraph 2.2.1 and 2.2.4 through 12 hours after overload impact.

2.2.20 Electrical insulation resistance of the supply circuit AIR-20/M2-H relative to the body is not less than:

- 20 MOhm at (20±5) °C ambient and relative humidity from 30 to 80%;
- 5 MOhm at the upper value of operating temperature and relative humidity from 30 to 80%;
- 1 MOhm at the upper level of relative humidity of the operating conditions and at (35±3) °C ambient temperature.

2.2.21 Supply chain insulation AIR-20/M2-H relative to the body withstands during 1 minute impact of testing voltage of practically sinusoidal form with 45 to 65 Hz frequency:

- 500 V for AIR-20/M2-H, AIR-20Exd/M2-H, AIR-20Ex/M2-H at (20±5) °C ambient temperature and relative humidity of 30 to 80%;
- 100 V for AIR-20A/M2-H, AIR-20Aex/M2-H at (20±5) °C ambient temperature and relative humidity of 30 to 80%;
- 300 V for AIR-20/M2-H, AIR-20Exd/M2-H at (35±3) °C ambient temperature and (95±3) % or 98 % relative humidity depending on climatic configuration;

2.2.22 Details of AIR-20/M2-H that are in contact with measured medium are made from corrosion-resistant materials and conform to details given in Tables 2.14, 2.16, 2.17.

Table 2.14 - Material Version

Configuration code	Material of		
	membrane	fitting or flange	O-ring (x) (see Table 2.16)
02V	36NKhTYu	12Kh18N10T	x=V
12x	316L	12Kh18N10T (316L)	x=V, P, N
13x	Al_2O_3	12Kh18N10T	x=V, P
14P	Al_2O_3	KhN65MV	x=P
15x	Tantalum	12Kh18N10T (316L)	x=P, N
16x	KhN65MV (Hastelloy-C)	KhN65MV (Hastelloy-C)	x=P, N
17x	Tantalum	KhN65MV (Hastelloy-C)	x=P, N
61N	Titanium alloy	12Kh18N10T	x=N

Table 2.15 - Models AIR-20/M2-H of “explosion-proof enclosure” (Exd configuration code) and pf oxygen configuration (O_2 version code)

Model	Configuration code	
	Exd	O_2
xx0, xx1, xx5, xx9	•	•
xx2		•
6x0	•	
5x0		
Note - «•» Configuration availability.		

Table 2.16 - O-Rings

Material	Designations in configuration
Viton	V
Ftoroplastic	P
No	N

Table 2.17 - Model configuration of AIR-20/M2-H according to materials

Model	Configurations	Basic configuration
0x0, 0x1, 1x0, 1x1 2x0, 2x1, 3x0, 3x1	12x, 15x, 16x, 17x	12N
150, 160, 170, 180, 190 350, 360	12x, 15x, 16x, 17x, 61N	12N
190E	12x, 15x, 16x, 17x	12N
xx9	12N, 15N	12N
xx2, xx5	13x, 14P	13V
4x0	12V, 15P, 16P, 17P, 12P	12V
470	02V	02V
5x0, 6x0	12V	12V

2.2.23 Measured medium temperature in the working cavity of AIR-20/M2-H - 40...+ 120 ° C.

2.2.24 Overall, connecting and mounting dimensions AIR-20/M2-H correspond to those indicated in Appendix A.

2.2.25 AIR-20/M2-H weight, depending on its configuration, does not exceed the one specified in Appendix A.

2.2.26 AIR-20/M2-H are resistant to ambient temperature in the extended temperature range given in item 2.1.14.

2.2.27 AIR-20/M2-H can withstand temperatures from - 50 ... + 50°C in a transport container.

2.2.28 AIR-20/M2-H have durability to ambient air effects with relative humidity of 98% at 35°C temperature in a transport container.

2.2.29 AIR-20/M2-H are proof against jarring with 80 blows per minute, mean-square value of acceleration is 98 m/s^2 and exposure duration is1 h in a transport container.

2.2.30. AIR-20A/M2-H, AIR-20AEx/M2-H have durability and resistance to sinusoidal vibration in a frequency range from 1 to 100 Hz at the amplitude of vibration acceleration of 20 m/s^2.

2.2.31. AIR-20A/M2-H, AIR-20AEx/M2-H have no constructive elements and units with resonant frequencies from 5 to 25 Hz.

2.2.32. AIR-20A/M2-H, AIR-20AEx/M2-H have durability and resistance to mechanical shock of single-acting with shock acceleration peak value of 20 m/s^2, shock pulse duration from 2 to 20 ms, and blow total of 30.

2.2.33. AIR-20A/M2-H, AIR-20AEx/M2-H have durability and resistance to repeated mechanical shocks with shock acceleration peak value of 30 m/s^2, preferred action duration of shock acceleration of 10 ms (permitted duration is from 2 to 20 ms) and a number of blows per direction is 20.

2.2.34. AIR-20A/M2-H, AIR-20AEx/M2-H have durability at earthquake load that are equivalent to vibrations with parameters specified in Table 2.18.

Table 2.8

Frequency, Hz	1.0	2.0	3.0	4.0	5.0	6.0	8.0	10.0	15.0	20.0	30.0
Acceleration, m/s^2	6.0	15.0	29.0	51.0	48.0	43.0	38.0	31.0	20.0	19.0	14.0

2.2.35 Electromagnetic compatibility and interference immunity providing

2.2.35.1 In accordance with GOST 32137-2013 AIR-20/M2-H are resistant to electromagnetic interference specified in Tables 2.5 and 2.5.1.

2.3 Explosion protection

2.3.1 Explosion protection of AIR-20Ex/M2-H, AIR-20AEx/M2-H

2.3.1.1 Power supply of explosion proof transmitters AIR-20Ex/M2-H, AIR-20AEx/M2-H is performed by intrinsically safe DC sources with voltage of 24 V or power supply in complete with measuring modular transmitters MMT 0399Ex/M3 (or power supply and signal transformation unit 4090Ex, MT 5122Ex, OMR 39Ex, OMR 49Ex) with explosion protection level “special explosion safety”.

Protect diode against polarity reverse is in supply chain.

Sign “X” following the explosion proof mark means that when in operation of pressure transmitters it is necessary to meet the following requirements:

- pressure transmitters should be operated with power supply and unit record equipment with intrinsically safe circuit of «ia» level according to TR CU 012/2011, GOST 30852.0-2002 GOST 30852.10-2002;

- when in operation it is necessary to take measures for temperature protection of pressure transmitter elements due to heating of measured medium above the level suitable for temperature class T6.

2.3.1.2 Output circuits of explosion proof transmitters AIR-20Ex/M2-H, AIR-20AEx/M2-H are designed for connection to intrinsically safe signal circuits with unified DC signal of 4–20 or 20–4 mA (connection diagrams of explosion-proof transmitters are shown in Figures 2.34 - 2.41) .

2.3.1.3 Maximum input current I_i does not exceed 120 mA, maximum input voltage U_i does not exceed 28 V, maximum internal capacity C_i and inductance L_i do not exceed 0.05 ufd and 0.2 mH respectively, maximum input power Pi does not exceed 0.8 W.

2.3.1.4 Insulation between an intrinsically safe circuit and a housing or grounded parts of a transmitter can withstand test voltage (effective) of AC at least 500 V.

2.3.2 Explosion protection of AIR-20Exd/M2-H

2.3.2.1 Explosion protection of AIR-20Exd/M2-H is provided with protection type of “explosion-proof enclosure” under TR TC 012/2011, GOST 30852.0-2002 GOST 30852.1-2002 and is reached with conclusion of electrical circuits AIR-20Exd/M2-H in the flameproof enclosure, which can withstand explosion pressure and prevents explosion transmission to surrounding explosive atmosphere. Enclosure strength is verified by tests according to GOST 30852.1-2002. Moreover, each enclosure is being tested with static hydraulic pressure of 2000 kPa for a time that is sufficient for inspection but not less than (10+2) s.

AIR-20Exd/M2-H has no sparking elements or heat-effected elements above 80 °C (for temperature class T6).

2.3.2.2 Interface facilities provide protection type of “explosion-proof enclosure”. These interfaces are designated by a word “Explosion” with an indication of allowed explosion protection parameters under GOST 30852.1-2002 : minimum axial thread length, thread pitch, number of full undamaged continuous thread (at least 5) in gear of flameproof thread connection. All screws are fixed with composition having thermal stability.

2.3.2.3 Flameproof enclosure surfaces of AIR-20Exd/M2-H are protected against corrosion by surfacing TSIATIM 221 Grease as per GOST 9433-80 and sealants.

2.3.2.4 Enclosure surface temperature does not exceed permissible values in accordance with GOST 30852.0-2002 for temperature class T6 equipment at any admissible mode AIR-20Exd/M2-H.

2.3.2.5 Screw that fixes a cover "Const. “0”” of a fitting of cable inputs is protected against loosening by means of locking with composition having thermal stability. A lock screw is used with a housing for protection from loosening of AIR-20Exd/M2-H cover connection.

2.4 Structure and function

2.4.1 Design and basic modules of AIR-20/M2-H:

2.4.1.1 AIR-20/M2-H consists of:
- Primary pressure transmitter (sensor);
- Electronic module

2.4.1.2 AIR-20/M2-H electronic module consists of:
- System unit;
- Power and filter module;
- Display module.

2.4.1.3 On the front side of the electronic module there are (see Figures 2.1 and 2.2.):
- LCD or LED indicator;
- control buttons «↵», «◄», «►» to operate with the device menu.

2.4.1.4 Display unit of the electronic module can be rotated at any angle in increments of 90º relative to the housing in accordance with Figure A.1.2 in Appendix A.

In order to change the position of the LCD display module or LED:
- undo the cover of AIR-20/M2-H;
- remove the display module, turn it to a desired angle (a multiple of 90 °) and set back (see Figure A.1 in Appendix A.);
- tighten the cover of AIR-20/M2-H;

2.4.1.5 AIR-20/M2-H in AH-02 housing is equipped with hermetic contact, which location zone is shown in Figure A.1 in Appendix A.

“Zero” adjustment of the measured signal is made at presentation a magnetic transmitter (optional) to this area and held for 3 s.

To adjust “zero”of AIR-20/M2-H in AH-03 housing it is necessary to open “Setup zero” cover, located on the transmitter housing, and make “zero” adjustment of the measured signal.

2.4.1.6 AIR-20/M2-H also provides the ability to adjust “zero” over HART-protocol and by the keyboard menu.

2.4.1.7 AIR-20/M2-H is protected from setting to zero with hermetic contact per protection parameter that is available under the HART-protocol as well as in the keyboard menu.

2.4.1.8 Setting to zero operation is possible if the readings of AIR-20/M2-H differ from zero not more than ± 5,0% from upper limit of maximum measurement range.

2.4.2 AIR-20/M2-H display elements

2.4.2.1 AIR-20/M2-H displays measurement results on LCD or LED indicator that contains the following display fields (see Figures 2.1 and 2.2.):

- main indicator field;
- indicator field or LEDs for units, “Percent of range” mode and root extracting mode.

General view of the AIR-20/M2-H front plate with LCD indicator

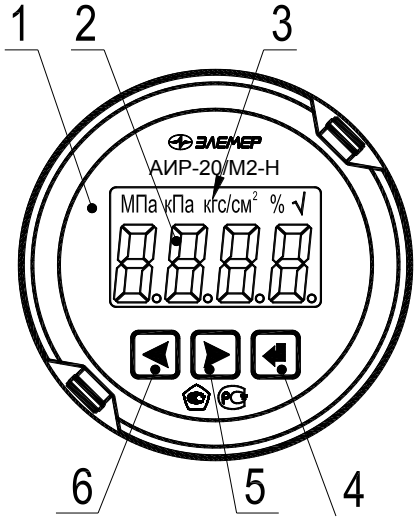

Figure 2.1

Legend for Figure 2.1:

1 – LCD indicator module;
2 - main indicator field;
3 - unit indication field, “Percent of range” signal indication mode and root extracting mode;
4 – control button ↵;
5 – control button ▶;
6 – control button ◀;

General view of the AIR-20/M2-H front plate with LED display

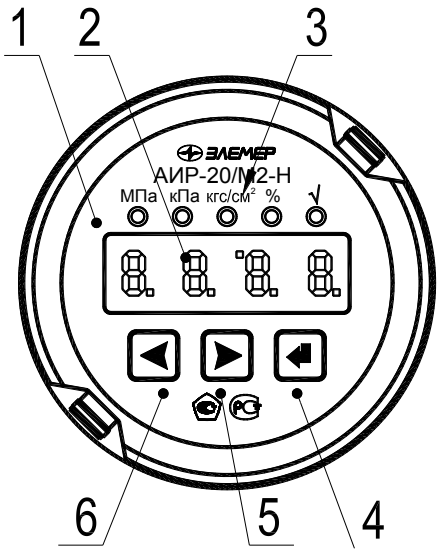

Figure 2.2

Legend for Figure 2.2:

1 – LED indicator module;
2 - main indicator field;
3 - unit LEDs, “Percent of range” signal indication mode and root extracting mode;
4 – control button ↵;
5 – control button ▶;
6 – control button ◀;

2.4.2.2 The main display is a four-digit seven-segment LCD or LED indicator with a height of displaying characters of 13 mm (for LCD indicator) and 10 mm (for LED indicator) and are used to indicate:
- measured values;
- mnemonic symbol of the selected item of push-button menu;
- configuration parameter value.

2.4.2.3 Unit indication field on LCD or LED indicator displays mnemonic symbols of a unit as well as indicates a signal display mode “Percent of

range” and mode of root extracting depending on pressure transformation into current output signal, if these modes are active. The following units are displayed on LCD display: kPa, MPa, kgf/cm^2. The following units are displayed on LED display: kPa, MPa, kgf/cm^2. For both indicators the absence of units displayed represents a selection of units other than kPa, MPa, kgf/cm^2. It is possible to define over HART-protocol which units other than kPa, MPa, kgf/cm^2 are installed and set required units that are supported by AIR-20/M2-H. Signal indication mode “Percent of range” and mode of root extracting dependency can be set or reset via the push-button menu or HART-protocol.

2.4.3 AIR-20/M2-H control elements.

2.4.3.1 AIR-20/M2-H has “↵”, “◄”, “►” buttons intended for:
- entering menu mode and exiting from it;
- menu browsing;
- editing configuration parameter values;
- executing configuration and adjustment operations.

2.4.3.2 Buttons for menu operation are located on the front panel (see Figures 2.1 and 2.2).

To access the buttons located on the front panel of AIR-20/M2-H undo the front cover.

2.4.4 Commutation and control agents

2.4.4.1 External electrical connections of AIR-20/M2-H are carried out using connectors, cable inputs and gland inlets indicated in Table B.1 of Appendix B.

2.4.4.2 Contact configurations of PLT-164-R, 2RMG14 (SH14) 2RMG22 (SHR22), GSP 311 are indicated in Figure 2.3.

Function of contact plugs PLT-164-R, 2RMG14 (SHR14) 2RMG22 (SHR22) and GSP 311 are indicated in Table 2.19.

Table 2.19

Pin number	Circuit name	
	Polarity variations of power supply connection	
	“К1-“	**“К1+”**
1	"Minus" power supply	“Plus" power supply
2	“Plus" power supply	"Minus" power supply
3	“Plus” of 5 mA output	“Plus" power supply
4	“Plus" power supply	“Plus” of 5 mA output

Plug PLT-164-R

Plugs
2RMG14 (SHR14),
2RMG22 (sHR22)

Plug GSP 311

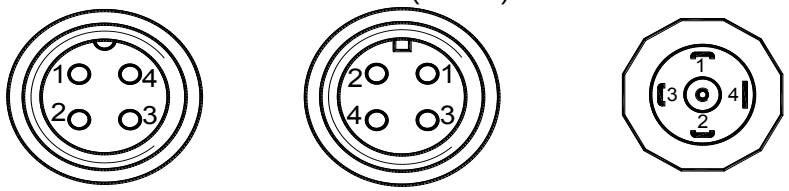

Figure 2.3 - Plug contact configuration

2.4.4.3 When using cable inputs and gland inlets of transmitters that are made in AH-03 type housing, cable is connected to a connector block of back plane located inside the transmitter housing. In order to access the back plane transmitter housing rear cover should be removed.

Visual appearance of back planes and functional contact configuration are specified in Figures 2.4 and 2.5

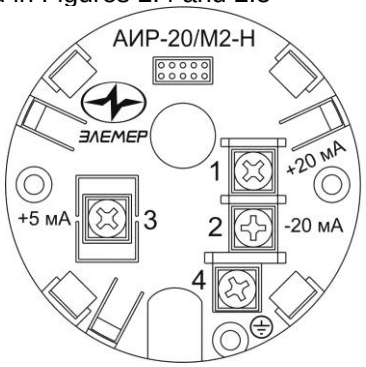

ЦЕПЬ	⊸⌀
+20 мА	1
-20 мА	2
+5 мА	3
Корпус	4

Цепь – Circuit мА - mA
Корпус – Housing

Figure 2.4 Visual appearance of the back plane and the functional contact configuration for AH-02 housing

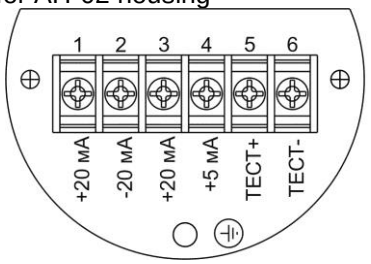

ЦЕПЬ	⊸⌀
+20 мА	1
-20 мА	2
+20 мА	3
+5 мА	4
ТЕСТ+	5
ТЕСТ-	6

Цепь – Circuit мА - mA
Корпус – Housing
Тест - Test

Figure 2.5 Appearance of the back plane and the functional contact configuration for AH-03 housing

2.4.4.4 Electrical connection diagrams when using a unified current signal of 4-20 and 0-5 mA to the connector block through a cable input and a gland inlet for the AH-02 housing are indicated in Figures 2.6 - 2.12.

2.4.4.5 Electrical connection diagrams when using a unified current signal of 4-20 and 0-5 mA to the connector block through a cable input and a gland inlet for the AH-02 housing are indicated in Figures 2.13 - 2.19.

2.4.4.6 Electrical connection diagrams through connectors SHR22, GSP or PLT-164-R for AH-02 and AH-03 housings (variant with connection polarity **“K1+”**) are indicated in Figures 2 20 - 2.26.

2.4.4.7 Electrical connection diagrams through connectors SHR22, GSP or PLT-164-R for AH-02 and AH-03 housings (variant with connection polarity **«K1-»**) are indicated in Figures 2.27 - 2.26.

2.4.4.8. Electrical connection diagrams of explosion proof AIR-20Ex/M2-N to the connector block through a cable input and a gland inlet for the AH-02 housing are indicated in Figures 2.34 - 2.35.

2.4.4.9 Electrical connection diagrams of explosion proof AIR-20Ex/M2-H to the connector block through a cable input and a gland inlet for the AH-03 housing are specified in Figures 2.36 - 2.37.

2.4.4.10 Electrical connection diagrams of explosion proof AIR-20Ex/M2-H through connectors SHR22, GSP or PLT-164-R for AH-02 and AH-03 housings (variant with connection polarity **“K1**+") are indicated in Figures 2.38, 2.39.

2.4.4.11 Electrical connection diagrams of explosion proof AIR-20Ex/M2-H through connectors SHR22, GSP or PLT-164-R for AH-02 and AH-03 housings (variant with connection polarity “K1-” are indicated in Figures 2.40, 2.41.

2.4.4.12 Connection diagrams for HART-protocol are indicated in Figures 2.42- 2.44.

Electrical connection diagrams
to the connector block through a cable input and a gland inlet for
AH-02 housing

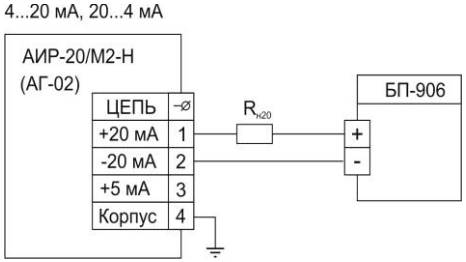

Figure 2.6

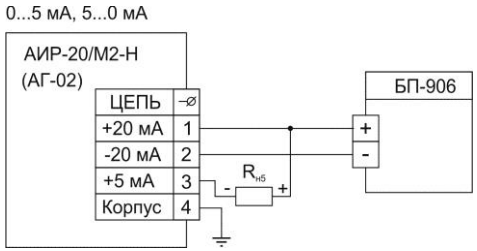

Figure 2.7

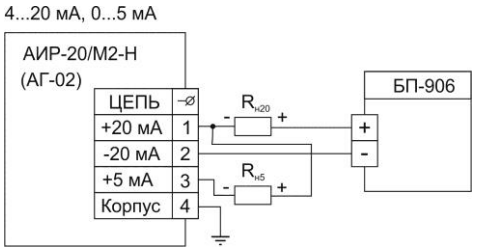

Figure 2.8

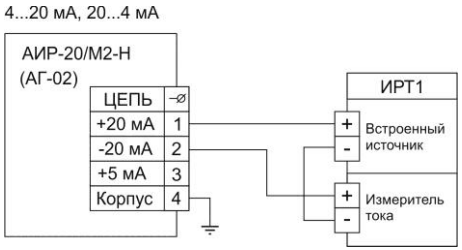

Figure 2.9

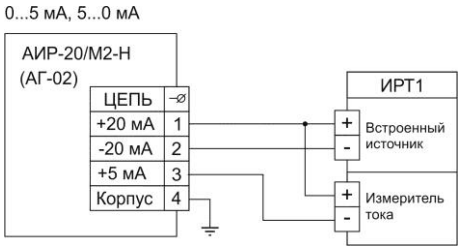

Figure 2.10

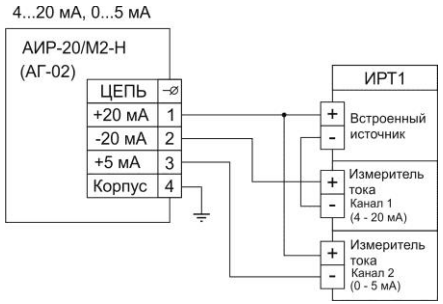

Figure 2.11

Цепь – Circuit
Корпус – Housing
Тест - Test
мА – mA
Встроенный источник – Built-in power supply
Измеритель тока – **C**urrent meter
Канал – Channel
АИР – AIR АГ - AH
БП – Power supply unit

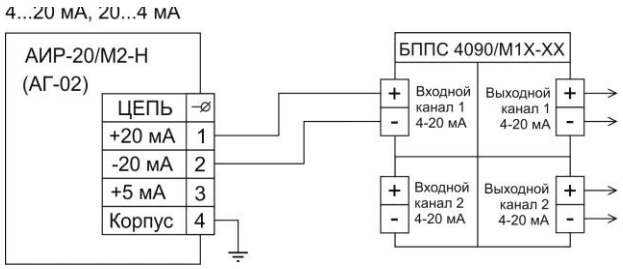

Figure 2.12

Цепь – Circuit	АГ – AH	АИР - AIR
Корпус – Housing	Тест – Test	мА – mA

БППС – Power supply and signal transformation unit
Встроенный источник – Built-in power supply
Измеритель тока – **C**urrent meter
Канал - Channel
Входной канал – Input channel
Выходной канал – Output channel
Подключение миллиамперметра тока в цепи – Milliamperemeter connection to control circuital current
Конроль тока – Current control

Electrical connection diagrams to the connector block through a cable entry and a gland inlet for AH-03 housing

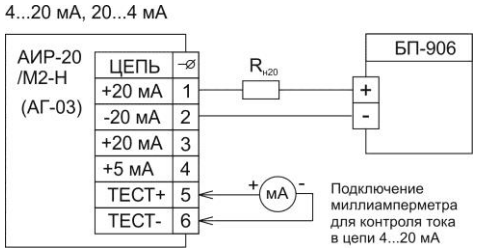

Figure 2.13

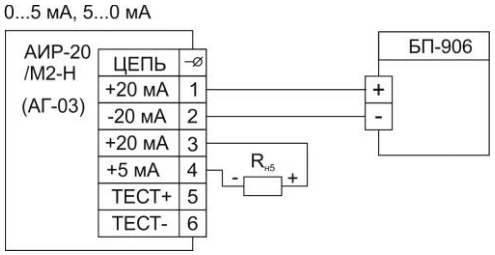

Figure 2.14

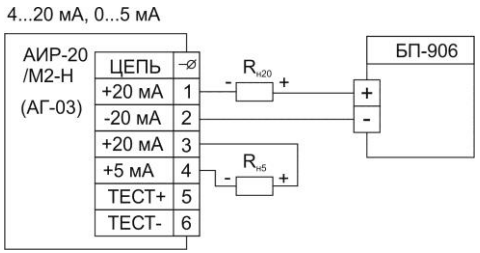

Figure 2.15

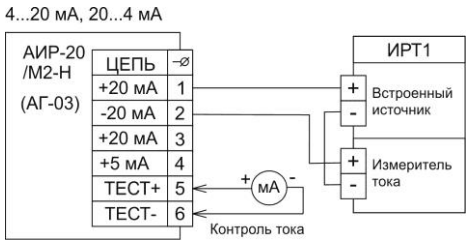

Figure 2.16

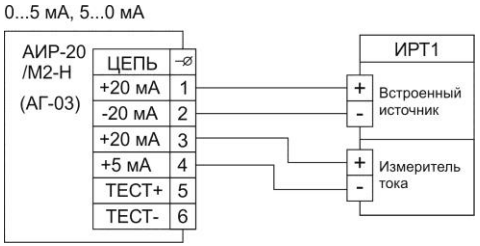

Figure 2.17

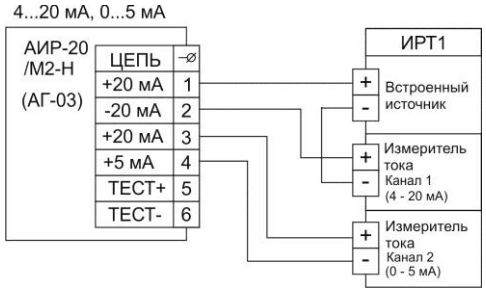

Figure 2.18

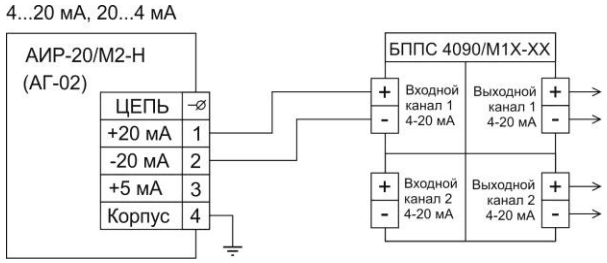

Figure 2.19

Цепь – Circuit
Корпус – Housing
Тест - Test
мА – mA
Встроенный источник – Built-in power supply
Измеритель тока – **C**urrent meter
Канал - Channel
Входной канал – Input channel
Выходной канал – Output channel
Подключение миллиамперметра тока в цепи – Milliamperemeter connection to control circuital current
Конроль тока – Current control
АИР – AIR АГ – AH
БП – Power supply unit
БППС – Power supply and signal transformation unit

Цепь – Circuit
мА – mA
Встроенный источник – Built-in power supply
Измеритель тока – Current meter
Канал - Channel
АИР – AIR АГ - AH
БП – Power supply unit

Electrical connection diagrams through connectors SHR22, GSP, or PLT-164-R for AH-02 and AH-03 housings (variant with connection polarity “K1+”)

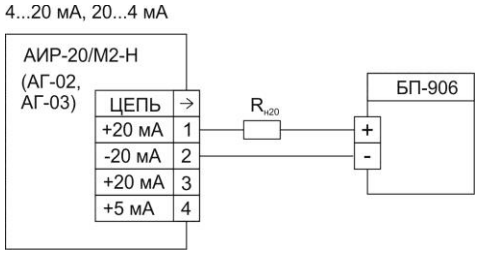

Figure 2.20

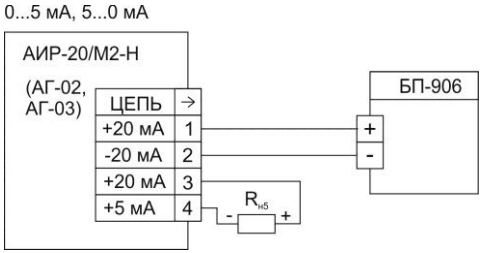

Figure 2.21

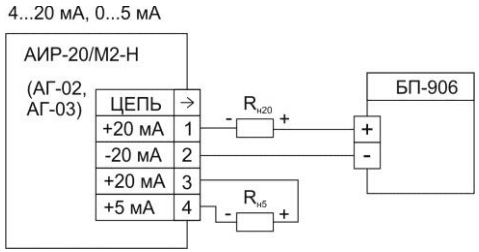

Figure 2.22

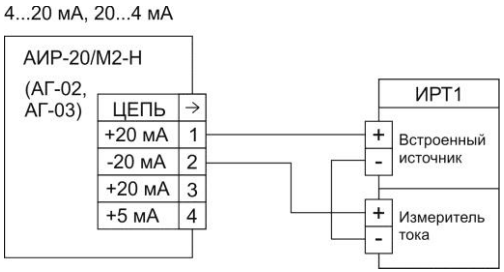

Figure 2.23

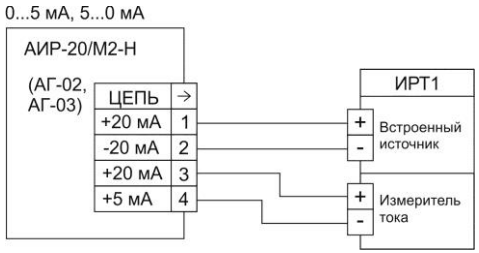

Figure 2.24

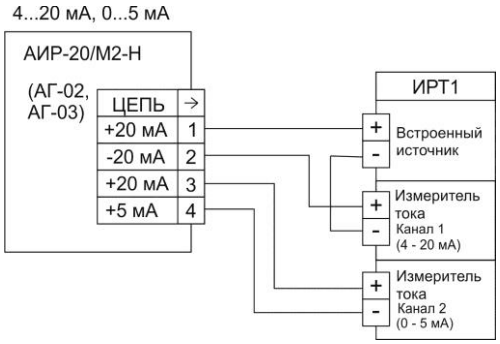

Figure 2.25

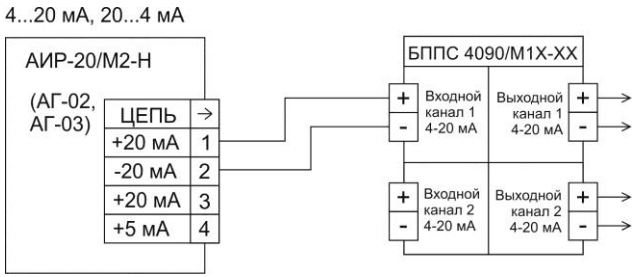

Figure 2.26

Electrical connection diagrams through connectors SHR22, GSP, or PLT-164-R for AH-02 and AH-03 housings (variant with connection polarity “K1-”)

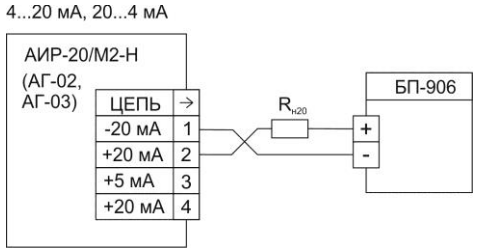

Figure 2.27

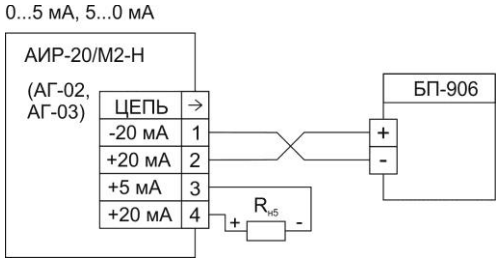

Figure 2.28

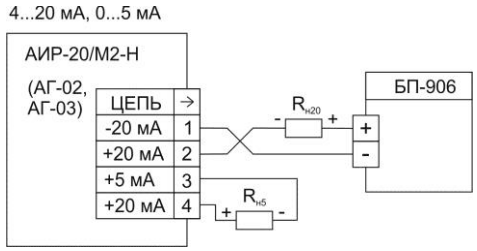

Figure 2.29

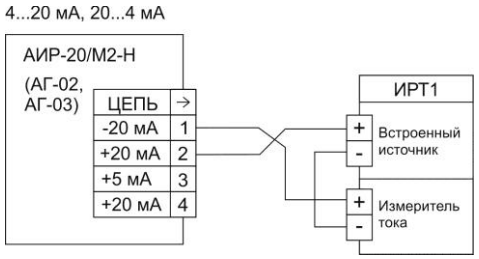

Figure 2.30

Цепь – Circuit
мА – mA
Входной канал – Input channel
Выходной канал – Output channel
Встроенный источник – Built-in power supply
Измеритель тока – Current meter
Канал - Channel
АИР – AIR АГ - AH
БП – Power supply unit
БППС – Power supply and signal transformation unit

Цепь – Circuit
мА – mA
Входной канал – Input channel
Выходной канал – Output channel
Встроенный источник – Built-in power supply
Измеритель тока – Current meter
Канал - Channel
АИР – AIR АГ - AH
БППС – Power supply and signal transformation unit

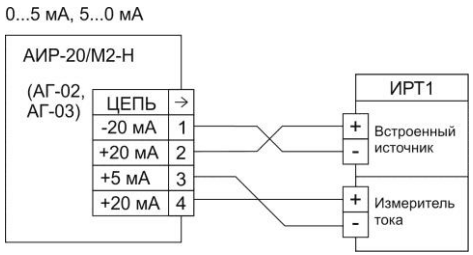

Figure 2.31

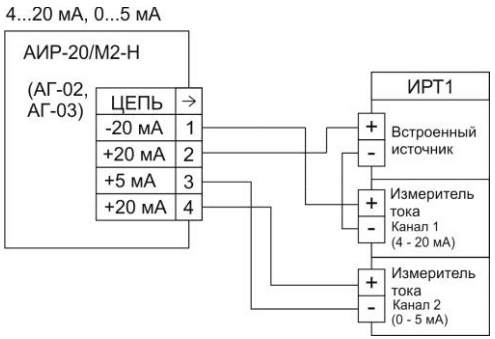

Figure 2.32

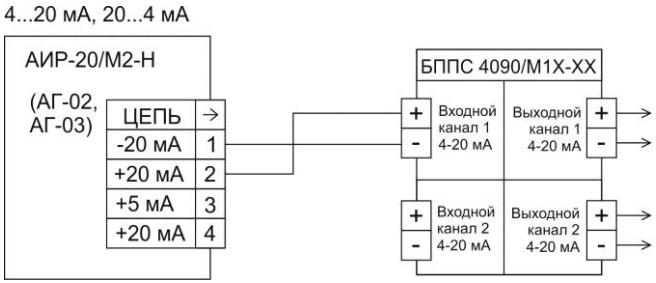

Figure 2.33

For Figures 2.6 - 2.33
(ИРТ1) ОМС1 - device, for example:
ОМС 5922,
ОМС 5922А - operational meter-controller
(universal millivoltmeters).
ОМС 1730D/A
ОМС 1730D/M - operational meter-controller
(universal millivoltmeters).
ОМС 5122,
(ТМ 5122А) МТ 5122А - multichannel thermometers.
(РМТ) ОМР 59, ОМР 69
ОМР 39DA, ОМР 39DM, ОМР 49DA,
ОМР 49DM - operational multichannel recorders.

Electrical connection diagrams
of explosion proof AIR-20Ex/M2-N to the connector block through a cable input and a gland inlet for АН-02 housing

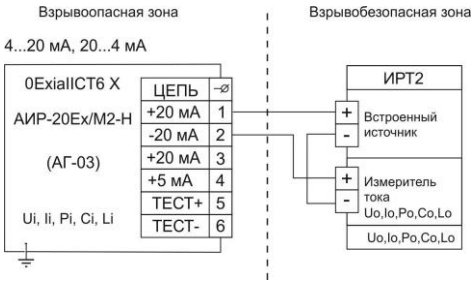

Figure 2.34

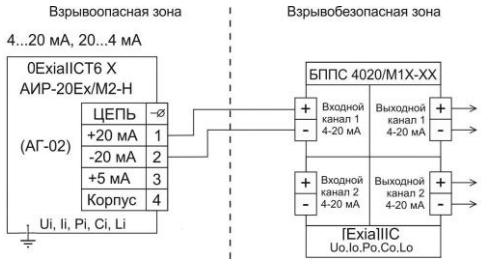

Figure 2.35

Electrical connection diagrams
of explosion proof AIR-20Ex/M2-N to the connector block through a cable input and a gland inlet for АН-03 housing

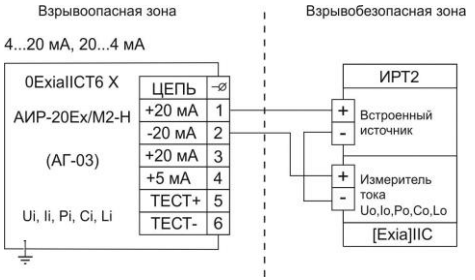

Figure 2.36

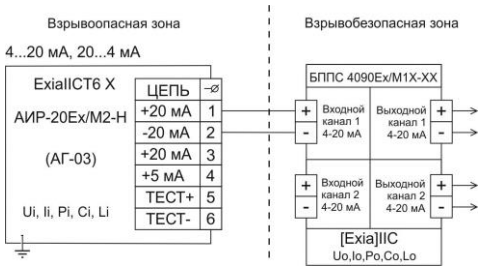

Figure 2.37

Цепь – Circuit
мА – mA
Входной канал – Input channel
Выходной канал – Output channel
Встроенный источник – Built-in power supply
Измеритель тока – Current meter
Канал – Channel
Взрывобезопасная зона - Explosion proof area
АИР – AIR АГ - АН
БППС – Power supply and signal transformation unit

Взрывоопасная зона - Explosion-hazardous area
Взрывобезопасная зона – Explosion-proof area
Цепь – Circuit
мА - mA
Корпус – Housing
Входной канал – Input channel
Выходной канал – Output channel
АИР – AIR АГ - AH
БППС – Power supply and signal transformation unit

Electrical connection diagrams of explosion proof AIR-20Ex/M2-H through connectors SHR22, GSP, or PLT-164-R for AH-02 and AH-03 housings. (variant with connection polarity “K1+”)

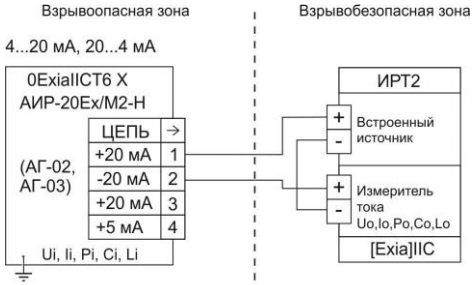

Figure 2.38

Figure 2.39

For Figures 2.34 - 2.39

(ИРТ2) OMC2 - device, for example:
MMT 0399Ex/M3 - modular measurement transmitter.
MT 5122Ex - multichannel thermometers.
OMR 39DEx,
OMR 49DEx - operational multichannel recorders.
OMC 5501Ex,
OMC 5502Ex - operational meter-controller

Electrical connection diagrams of explosion proof AIR-20Ex/M2-H through connectors SHR22, GSP, or PLT-164-R For AH-02 and AH-03 housings (variant with connection polarity “K1-”)

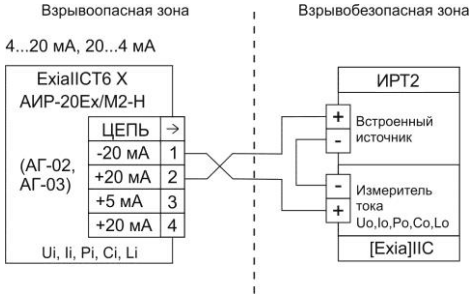

Figure 2.40

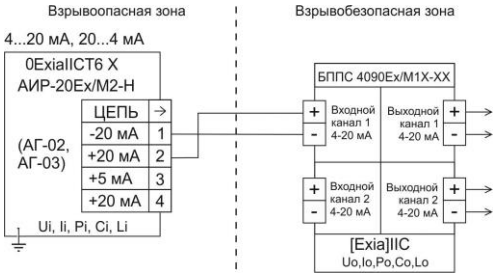

Figure 2.41

Single connection diagram AIR-20/M2-H
over HART-protocol through connectors SHR22, GSP, or PLT-164-R
For AH-02 and AH-03 housings.

Single connection "point to point"
Short address = 0

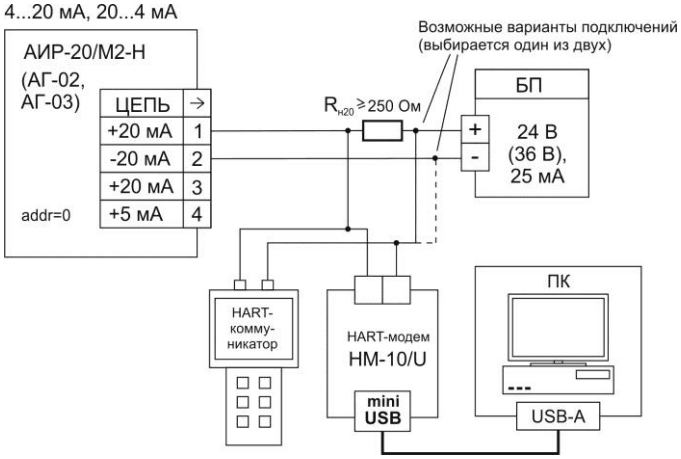

Figure 2.42

Возможные варианты подключений (выбирается один из двух) - Possible connections (choose one of two)
HART-модем – HART-modem
HART-коммуникатор – HART-communicator
БП – Power supply
ПК - PC

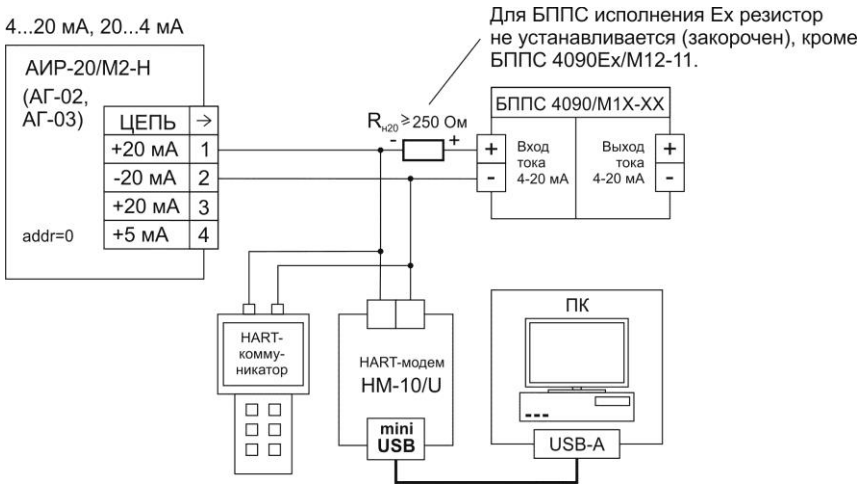

Figure 2.43

For power supply and signal transformation unit of Ex configuration the resistor is not installed (short-circuited), except 4090Ex/M12-11
мА – mA
Цепь - Circuit
Вход тока – Current input
Выход тока – Current output
HART-коммуникатор – HART-communicator
HART-модем – HART-modem
БППС - Power supply and signal transformation unit
ПК – PC

“Multiple-point” connection diagram AIR-20/M2-H over HART-protocol through connectors SHR22, GSP, or PLT-164-R For AH-02 and AH-03 housings

Network connection

Short address = 1...5

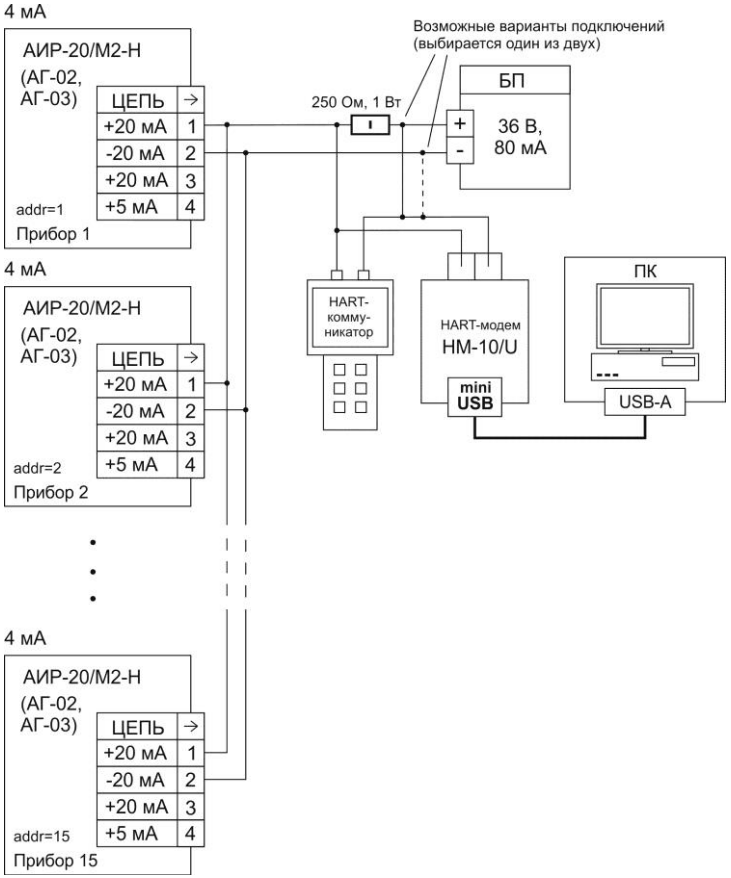

Figure 2.44

Возможные варианты подключений (выбирается один из двух) - Possible connections (choose one of two)
HART-Модем – HART-Modem
HART - Коммуникатор – HART - Communicator
Прибор – Device
ПК - PC

2.4.5 General operating principles

2.4.5.1 Functional principle

The analyzed medium is fed into the primary pressure transmitter (sensor) and deforms its membrane thus, depending on the sensor type, resulting in resistance change of tensoresistors (resistive-strain sensors) located on the membrane or in capacitance change between the membrane and underlay (capacitance-type sensors).

Parameter variation is registered by electronic unit, transformed into digital code and thereafter into pressure value. The measured pressure value is displayed on the indicator and transformed into HART-interface digital signals and unified current signals of 4-20 and 0-5 mA. Simultaneous functioning of HART-protocol and unified current outputs is only possible in "point-to-point" mode.

2.4.5.2 Signal conditioning over HART-protocol

AIR-20/M2-H with HART-protocol is able to transmit the data on measured value in digitized form over two-wire line along with 4-20 mA direct-current signal. AIR-20/M2-H supports operation via HART-interface in "point-to-point" and "multiple-point" modes.

"Point-to point" mode has the following features:

- AIR-20/M2-H forms a 4-20 mA standard unified current signal;
- AIR-20/M2-H forms a 0-5 mA standard unified current signal;
- AIR-20/M2-H forms a digital HART-signal, transmitted over 4-20 mA electric circuits, while the transmission of digital signal does not distort the analog signal;
- AIR-20/M2-H supports data exchange with one or two HART devices (communicator, PC equipped with HART-modem);
- AIR-20/M2-H should have "short" HART-address: "0".

"Multiple-point" mode has the following features:

- AIR-20/M2-H uses 4-20 mA circuit for power supply only;
- AIR-20/M2-H forms a digital HART-signal, transmitted over 4-20 mA electric circuits;
- AIR-20/M2-H allows for the network connection of 1 to 15 transmitters;
- AIR-20/M2-H should have various "short" HART-addresses, preset in "point-to-point" mode and different from "0";
- setting up the address, different from "0", switches the transmitter to conditioning mode of 4 mA direct current with 4-20 mA output and 0 mA current with 0-5 mA output;
- power source should provide an output current of at least N•4 mA (where N is a number of connected AIR-20/M2-H devices), and also

should have such output voltage (U, B) that the following inequality is satisfied: $U \geq 0{,}004 \cdot N \cdot R_{HART} + 12$ B (where R_{HART} stands for resistance of a series HART-resistor whose nominal value is 250 ohm).

– HART-signal is received and processed by one or two HART-devices (communicator and/or PC equipped with HART-modem).

2.4.5.3 Operation with AIR-20/M2-H over HART-protocol

HART-protocol is implemented in AIR-20/M2-H which fully conforms to the version 7 HART-protocol. The signal can be received and processed by any device that supports this protocol, including handheld HART-communicator or personal computer (PC) through the standard serial port and accessory HART-modem. HART-protocol allows for the simultaneous presence of two control devices in the system: control system (PC with HART-modem) and handheld HART-communicator. These two devices have various addresses and perform data exchange in communication channel time sharing mode, hence AIR-20/M2-H is able to receive and execute the instructions from each of them.

The list of HART-instructions supported by AIR-20/M2-H is contained in Appendix C.

HARTconfig user software is installed on the external PC and provides the communication between PC and transmitter through HART-modem.

The software allows:

- to read the measurement results;
- to read and write the AIR-20/M2-H configuration parameters;
- to perform adjustments and factory settings recovery.

In order to operate with AIR-20/M2-H the software requires a modem connected to USB-port of the PC (HART-modems HM-10/B (HM-10Ex/B) or HM-10/U produced by SPC "ELEMER", Ltd, or any other modem from other manufacturers may be used for this purpose). Modem can be connected to AIR-20/M2-H in parallel with 4-20 mA current loop load resistor or directly to the terminals of AIR-20/M2-H.

2.4.6 Basic modes

2.4.6.1 AIR-20/M2-H has the following basic operating modes:

- measurement mode;
- menu mode.

2.4.7 Measurement mode

2.4.7.1 AIR-20/M2-H switches to measurement mode upon power-up. This mode is intended for input signal measurement, displaying the meas-

urement results on the the indicator, pressure conversion into 4-20 and 0-5 mA unified current signal as well as digital signal over HART protocol.

2.4.8 Menu mode

2.4.8.1 The menu mode is intended for configuration parameters editing and for implementation of special configuration and adjustment operations.

2.4.8.2 The configuration parameters list has a two-level structure. Upper level, main menu (see Table 2.20) and lower level, submenu (see Table 2.21).

2.4.8.3 Navigation through the menu is carried out with the "↵", "◄", and "►" buttons.

2.4.8.4 The "↵" button is used for switching to the AIR-20/M2-H menu from the measurement mode, switching to the parameter edit mode and for entering (recording) the update parameter values in the memory of AIR-20/M2-H electronic unit. When entering the menu mode, the symbol of the edited parameter is displayed on the indicator.

2.4.8.5 The "◄" button is intended for reviewing (selecting) the menu parameters backwards and changing the value of the edited digit.

2.4.8.6 The "►" button is intended for reviewing (selecting) the menu parameters forwards and selecting the edited digit.

2.4.8.7 Simultaneous pressing of the "◄" and "►" buttons in the parameter review (editing) will exit the review (edit) mode without saving the changes of the edited value.

2.4.8.8 Simultaneous pressing of the "◄" and "►" in the menu mode will exit to the measurement mode.

2.4.8.9 Setting (editing) of parameter numeric values is carried out in the following sequence:

- press the "↵" button in the menu browse mode;

- choose the edited digit with the "►" button, while the edited digit is blinking;

- when pressing the "◄" button the value of the edited digit is increased by 1, "9" is followed by "0"; in the top digit "9" is followed by a minus ("-") sign and then by "0";

- complete the value editing (with saving the set value) by pressing the "↵" button;

- if none of the buttons is pressed for 2 minutes during the editing, AIR-20/M2-H will switch to the measurement mode without saving the edited results.

2.4.8.10 Selecting of parameter values from the list has the following features:

- after selecting the corresponding menu item press the "↵" button, while the edited parameter will start blinking;

- proceed from one parameter value to another with "◄" (backwards) and "►" (forwards) buttons;

- complete the value editing (with saving the selected value) by pressing the "↵" button;

- if none of the buttons is pressed for 2 minutes during the editing, AIR-20/M2-H will switch to the measurement mode without saving the edited results.

2.4.8.11 Press the "↵" button to enter the menu. A "PASS" message will appear on the sensor indicator - a password request (if the password to edit the parameters has been set). Set the password numeric value (integer within the range of 1 to 9999) with the "◄" and "►" buttons and press the "↵" button. If the entered password is correct, a "YES" message will appear on the indicator for 1 second. If the entered password is incorrect, when pressing the "↵" button a "AcdE" message will appear on the indicator for 1 second, meaning that parameters editing is prohibited (only viewing allowed). If the password is set to "0", the password will not be requested.

2.4.8.12 Press the "↵" button to enter the submenu (when "Sub" parameter is selected). Choose the required parameter of the submenu with "◄" and "►" buttons and press the "↵" button to enter the parameter editing mode, while the displayed symbolic parameter or edited digit will start blinking.

2.4.8.13 In the editing mode set the desired parameter value with the "◄" and "►" buttons. Press the "↵" button. Blinking will stop and the set parameter value will be saved in the instrument memory.

2.4.8.14 In order to return from the submenu mode to the main menu and from the main menu to measurement mode, choose the "rEt" parameter and press the "↵" button.

2.4.8.15 For a quick return to the measurement mode from any menu level press the "◄" and "►" buttons simultaneously as long as parameter value is not blinking on the indicator (i.e. parameter editing mode is not switched on).

The instrument will also return to the measurement mode without saving changes if none of the buttons is pressed for 2 minutes (automatic exit).

Table 2.20 – Main menu

Main menu item	Parameter name	Factory setting	Note
Unit	Pressure measuring units	kPa or MPa	Choice of measuring units from the list
Lr	Lower limit of measurement and conversion range	****	Numeric value from the sensor measurement range corresponding to 4 mA output signal
Ur	Upper limit of measurement and conversion range	****	Numeric value from the sensor measurement range corresponding to 20 mA output signal
LtL	Minimum lower limit of measurement range	****	This parameter is set up in the process of manufacturing and corresponds to sensor model, for reviewing ony
UtL	Maximum upper limit of measurement range	****	This parameter is set up in the process of manufacturing and corresponds to sensor model, for reviewing ony
SPAn	Minimum range of measurement and conversion	****	This parameter is set up in the process of manufacturing and corresponds to sensor model, for reviewing ony
t_63	Damping time	0 sec	Set within the range of 0.0 to 99.9 seconds in increments of 0.1 second
PrcS	Amount of decimals	2	Defines the amount of decimals after the decimal point for numeric values displayed on the indicator
Ind	Indication mode	kPa or MPa	Defines the values displayed on the indicator: pressure, percentage of measurement range or current
FUnc	Conversion function type	Lin	Choice of linear ("Lin") or square root ("Sqrt") conversion function
SUb	Enter the submenu	-	The submenu contains additional configuration parameters
rEt	Exit the menu	-	Return to the measured values indication mode

Table 2.21 – Submenu (Sub»)

Submenu item		Parameter parameter	Factory setting	Note
	OUtP	Current output menu	-	Enter the current output parameter setting menu
Current output menu	***Acti***	Choice of current output to be displayed (only for configurations with two circuit outputs)	-	Choice of master current output, whose values will be displayed in the current output menu. Values of slave current output will be calculated according to the values of master current output.
	tYPE	Current output type	4-20	Choice of direct "4-20" ("0-5") or inverse "20-4" ("5-0") conversion relation
	OutF	Fixed current mode	OFF	Choice of fixed current values from the list
	OErr	Error current rate	3.7	Choice of error current rate from the list (low/high)
	SHFt	Current output offset menu		
	rEt	Exit the current output menu	-	Return to submenu mode
Offset menu current output menu	***SEt***	Current output offset settings	-	Master current output offset value settings
	CLr	Reset the current output offset		Setting the master current output offset value to zero
	rEt	Exit the current output offset menu	-	Return to submenu mode
	Corr	Measurement range correction mode	-	Access to lower and upper measurement and conversion range limits correction mode
Measurement range correction menu	***SHFt***	Pressure offset menu	-	Measured value offset for a set value
	nULL	"Zero" setting	-	Setting the measured pressure value to zero
	SEtL	Lower measurement range limit adjustment	-	Setting the exact value of measured value near the lower measurement and conversion range limit
	SEtH	Upper measurement range limit adjustment	-	Setting the exact value of measured value near the upper measurement and conversion range limit
	rEt	Exit the measurement range correction menu	-	Return to submenu mode

Table 2.21 continued

Submenu item		Parameter parameter	Factory setting	Note
Pressure offset menu	***SEt***	Pressure offset setting	-	Setting the pressure offset value by adjustment
	CLr	Reset the pressure offset	-	Setting the pressure offset value to zero
	rEt	Exit the pressure offset menu	-	Return to submenu mode
	Prot	Protection parameters menu	-	Access to the protection parameters menu
Protection parameters editing menu	***PASS***	Password input and editing	0	Password to edit the configuration parameters, accepted value from 0 to 9999
	HArt	Prohibition to enter and edit the parameters over HART-protocol	OFF	Sensor configuration over HART-protocol prohibited ("On") or allowed ("OFF")
	GErc	Setting "zero" with the hermetic contact	On	Setting the readings to zero with the hermetic contact allowed ("On") or prohibited ("OFF")
	butt	Setting "zero" with the button	On	Setting the readings to zero with the "◄" button allowed («On») or prohibited ("OFF") in the measurement mode
	rEt	Exit from the submenu	-	Return to submenu mode
	FAct	Reset to factory settings	-	Substitution of all instrument parameters from instrument ROM
	rEt	Exit from the submenu	-	Return to the main menu

2.4.8.16 *"Unit"* - pressure measurement units. The complete list of supported measurement units: Pa, kPa, MPa, kgf/cm^2, kgf/m^2, mm Hg, mm H2O, mbar, bar, atm. Indicator displays: kPa, MPa, kgf/cm^2. The remaining measurement units can be chosen over HART-protocol, in so doing, if the chosen measurement units differ from those displayable by the indicator, the measurement unit titles will not be displayed. Using the button menu, the user can choose from kPa, MPa, kgf/cm^2 or other measurement unit outside this list set up last time over HART-protocol (factory setting is kPa or MPa). In so doing, the measurement unit titles will not be displayed on the indicator. When changing the measurement units, the amount of decimals after the decimal point and measurement range limits are recalculated automatically in terms of selected measurement units. The parameter determines the dimensions of measurement result displayed on the main indicator.

2.4.8.17 *"Lr"* and *"Ur"* - lower and upper measurement range limits of AIR-20/M2-H. These parameters determine the conversion range for 4-20

mA and 0-5 mA current outputs. The range value should should be within the maximum measurement range, defined by sensor model in accordance with Table 2.7 and should correspond to conditions of "SPAn" parameters. Accepted value: from -999 to +9999.

2.4.8.18 *"LtL"* and *"UtL*" - minimum lower and maximum upper measurement range limits. The limits values are set on the manufacturing plant in accordance with Table 2.7.

These parameters are available for reviewing only. While attempting to edit these parameters the "AcdE" message is displayed.

2.4.8.19 *"SPAn"* - minimum measurement range. This parameter is set on the on the manufacturing plant in accordance with Table 2.7. This parameter is available for reviewing only. While attempting to edit this parameter the "AcdE" message is displayed. While attempting to set such lower and upper measurement range limits, under which the range value is below the minimum value, the "Er12" message is displayed.

2.4.8.20 *"t_63"* - damping time. Time constant of the first order filter is the parameter, allowing to reduce the measurement noise. While setting the value of this parameter it should be considered that if the pressure is changed stepwise for 100 % of measurement range, the output signal measurement value will reach the value of 63 % of the range in the time set in the parameter. Accepted values: form 0 to 99.9 seconds in increments of 0.1 sec.

2.4.8.21 "*PrcS"* - the amount of decimals after the decimal point. The maximum amount of decimals after the decimal point of numeric values of measured pressure, displayed on the indicator, and of measuremebnt range limits, set by the user. The measured pressure amount is presented as a floating decimal point number, which is automatically offset to the right if the measured parameter value increases because of limited indicator capacity. If number of digits for an integral part of a number (including character) is more than indicator's number of digits, then the " - - - - " will appear on the indicator. While editing the parameter, the decimal point changes its position on the indicator. Accepted values: 0, 1, 2, 3.

2.4.8.22 *"Ind"* – indication mode. Measured value Indication type of the main indicator. To be chosen from the following list: "PrES" - pressure in selected measurtement units, "PrOC" - percentage of measurement range and "Curr" - current of master output. If "PrOC" and square root conversion function are chosen, the percentage of measurement range will be displayed on the instrument indicator and transferred over HART-protocol with consideration of square root dependency.

2.4.8.23 *"FUnc"* - conversion function type, choice of linear "Lin" or square root "Sqrt" output signal conversion function. If square root function is selected, the measured pressure differential is displayed on the indicator. The measured pressure range with normalized error will be from 2 to 100 %

for pressure differential, defined by the "Lr" and "Ur" parameters; measured value range of conversion into 4-20 mA and 0-5 mA current signals with normalized error and square root function will be from 6.26 to 20 mA and from 0.71 to 5 mA accordingly.

2.4.8.24 *"Acti*" - selection of master current output (only for configurations with two circuit outputs: output signal codes 05, 05 √, 50, 50 √) Accepted values: "4-20" or "0-5". In "TYPE", "OErr", and "OutF" menu items the values for master current output will be displayed. Values of slave current output will be calculated according to the values of master current output.

2.4.8.25 "*tYPE*" - current output type. Choice of direct "4-20" ("0-5") or inverse "20-4" ("5-0") current signals conversion relation. For the "4-20" ("0-5") conversion type, 4 mA output current for 4-20 mA current output and 0 mA current for 0-5 mA current output correspond to lower limit "Lr"; 20 mA current for 4-20 mA current output and 5 mA current for 0-5 mA current output correspond to upper limit "Ur". For the "20-4" ("5-0") conversion type, 20 mA output current for 4-20 mA current output and 5 mA current for 0-5 mA current output correspond to lower limit "Lr"; 4 mA current for 4-20 mA current output and 0 mA current for 0-5 mA current output correspond to upper limit "Ur".

2.4.8.26 *"OutF"* - fixed currents mode. Parameter, allowing to switch the sensor to fixed current values emulation mode on 4-20 mA and 0-5 mA outputs. 4-20 mA current value is chosen from the list: "OFF" (fixed current mode off), "3.7", "4.0", "8.0", "12.0", "16.0", "20.0", and "22.5" mA. 0-5 mA current value is chosen from the list: "OFF", "0.0", "1.25", "2.5", "3.75", "5.0", and "5.5". In order to switch the sensor to emulation mode, choose this parameter and press the "↵" button. After that, choose the fixed current value for 4-20 mA or 0-5 mA current with "◄" or "►" button and switch the sensor to current emulation mode for both current outputs with the "↵" button. In order to exit from emulation mode and switch the sensor to measurement mode, select the "OFF" parameter and press the "↵" button. Power supply interruption or instrument reboot will automatically switch fixed output currents mode off. The value of emulated current on 4-20 mA current output or on 0-5 mA current output can be controlled if necessary by connection milliamperemeter into opening of the respective current output.

2.4.8.27 *"OErr*" - error current rate. This parameter determines current output rates in the following cases:

- measured value is below the lower measurement range limit by 1.25 % of the range;
- measured value is above the upper measurement range limit by 12.5 % of the range;
- on the occurrence of sensor malfunction.

One of the three parameter values can be selected from AIR-20/M2-N keyboard:

- *"OFF"* - error current prohibited;
- *"L_o"* - low error current value;
- *«H»* - high current error value.

Values of low and high error current are assigned with HARTconfig configuration software. Factory settings: "3.7" and "22.5" mA for "4-20" current output, "0.0" and "5.5" for "0-5" current output. Values of low and high error current for slave current output are calculated based on master current output values according to the formula: $I_{05} = 5 \cdot (I_{420} - 4)/16$, if "4-20" is the master current output or according to the formula: $I_{420} = 4 + 16 \cdot I_{05}/5$, if "0-5" is the master current output. Where I_{420} is error current value of 4-20 mA output, I_{05} is error current value of 0-5 mA output.

2.4.8.28 *"Set"* in the current output parameter menu - the offset of current output signal value. The parameter allows to offset the master current signal value I for a set value I_{CM} according to the formula $I' = I + I_{\mathrm{CM}}$. The offset value should not exceed 30 % of master current output range. The offset is carried out with the "◄" button to decrease current value and the "►" to increase current value. In so doing, the offset current amount will be displayed on the indicator and blinking. After setting the desired current amount press the "↵" button to apply the offset. If successful, the "donE" message will appear. Otherwise, if the offset value lies outside the acceptable limits, the "FAIL" message will appear. While offsetting the current output is should be considered that scale offset does not affect the output of fixed currents.

2.4.8.29 *"CLr"* in the current output parameters menu - reset of current output offset. The parameter allows to set the master current output offset value to zero. In order to reset the offset press the "↵" button and confirm the operation by selecting the "YES" item with "◄" and "►" buttons and pressing the "↵" button. If successful, the "donE" meassage will appear. This operation should be performed before AIR-20/M2-H instrument check (calibration).

2.4.8.30 *"Set"* in the measurement range correction menu - pressure value offset. This parameter allows to offset the measured value for a set value not exceeding 30 % of measurement range according to the formula $P' = P + P_{\mathrm{CM}}$. In so doing, upper and lower limits do not change. It should be considered when analyzing error current generation (paragraph 2.4.8.27). The offset is carried out with the "◄" button to decrease pres-

sure value and the "▶" to increase current value. In so doing, the offset pressure amount will be displayed on the indicator and blinking. After setting the desired pressure amount press the "↵" button to apply the offset. If successful, the "donE" message will appear. Otherwise, if the offset value lies outside the acceptable limits, the "FAIL" message will appear. Before AIR-20/M2-H check (calibration) it is necessary to set the pressure offset value to zero.

2.4.8.31 "CLr" in the measurement range correction menu - reset of pressure offset. The parameter allows to set the pressure offset value to zero. In order to reset the offset press the "↵" button and confirm the operation by selecting the "YES" item with "◀" and "▶" buttons and pressing the "↵" button. If successful, the "donE" message will appear. This operation should be performed before AIR-20/M2-H instrument check (calibration).

2.4.8.32 "*nULL*" - "Zero" setting. The parameter leads to zero offset of AIR-20/M2-N. In order to offset zero it necessary to apply zero excess pressure to AIR input for EP, ExpP, EEP, and HP models; zero absolute pressure (absolute pressure on input should not exceed 0.01 % of measurement range) for AP models; zero pressure differential for DP models. Then, select "nULL" parameter with "◀" and "▶" buttons. After stabilization of sensor readings press the "↵" button and confirm the operation by selecting the "YES" item with "◀" and "▶" buttons and pressing the "↵" button. If successful, the "donE" message will appear. Otherwise, the "FAIL" message will appear. Zero setting operation is possible if transmitter readings differ from zero for no more than ±5,0 % of maximum sensor measurement range. "Zero" adjustment can be also performed the hermetic contact (see paragraph 2.4.8.37).

2.4.8.33 *"SEtL"* - measurement range lower limit adjustment. In order to adjust lower measurement range limit it is necessary to apply excess pressure to AIR for EP, ExpP, EEP, and HP models; absolute pressure for AP models; pressure differential for DP models. The applied pressure should differ from measurement range value for no more than ±12 %. Then, select "SEtL" parameter with "◀" and "▶" buttons. After stabilization of sensor readings press the "↵" button, set the readings values

in accordance with applied pressure with "▶" and "◀" buttons and press the "↵" button. If successful, the "donE" message will appear. Otherwise, the "FAIL" message will appear. Operation is possible if measured pressure differ from actual one for no more than ±5,0 % of maximum sensor measurement range of AIR-20/M2-H.

2.4.8.34 "SEtH" - measurement and conversion range upper limit adjustment. In order to adjust upper measurement range limit it is necessary to apply excess pressure to AIR-20/M2-H for EP, ExpP, EEP, and HP models; absolute pressure for AP models; pressure differential for DP models. The applied pressure should differ from measurement range upper limit value for no more than ±12 %. Then, select "SEtH" parameter with "◀" and "▶" buttons. After stabilization of sensor readings press the "↵" button, set the readings values in accordance with applied pressure with "◀" and "▲" buttons and press the "↵" button. If successful, the "donE" message will appear. Otherwise, the "FAIL" message will appear. Operation is possible if measured pressure differ from actual one for no more than ±5,0 % of maximum sensor measurement range of AIR-20/M2-H.

2.4.8.35 *"PASS*" - settings of password for configuration of the instrument from the menu Select the "PASS" parameter with "◀" and "▶" buttons and press the "↵", set the desired password with "▶" and "◀" buttons and press the "↵" buttons. If successful, the "donE" message will appear.

2.4.8.35.1 In case of loss of the password it is possible to retrieve it over HART-protocol.

2.4.8.36 *"HArt"* - the parameter prohibits ("On") or allows ("OFF") the instrument configuration over HART-protocol.

2.4.8.37 "*GErc"* - permission to set "zero" with the hermetic contact. The parameter allows ("On") or prohibits ("OFF") setting the sensor to zero using the hermetic contact located on the housing of AIR-20/M2-H.

In order to adjust the "zero", bring the magnetic key fob (option) to "hermetic contact zone" located on the housing of AIR-20/M2-H when the instrument is in the measurement mode. Wait until the measured value is blinking on the indicator and keep the magnetic key fob near "hermetic contact zone" for three seconds until the "donE" message appears. Otherwise, the "FAIL" message will appear. Operation is possible if measured pressure

differ from actual one for no more than ±5,0 % of maximum sensor measurement range of AIR-20/M2-H.

2.4.8.38 "*butt"* - permission to set "zero" with the "◄" button in the measurement mode. The parameter allows ("On") or prohibits ("Off") setting the sensor to zero using the "◄" button.

In order to adjust the "zero", press the "◄" button when AIR-20/M2-H is in measurement mode. Wait until the "nULL" message is blinking on the indicator and hold the button pressed for three seconds until the "donE" message appears. Otherwise, the "FAIL" message will appear. Operation is possible if measured pressure differ from actual one for no more than ±5,0 % of maximum sensor measurement range of AIR-20/M2-H.

2.4.8.39 *"FAct"* - factory settings recovery. The mode is intended for recovery of parameter values of AIR-20M2-H in accordance with factory settings. This function should be used in case of incorrect instrument configuring by the user, resulted in instrument malfunction. In order to recover the factory settings select the "FAct" parameter with "◄" and "►" buttons and presss the "↵" button. Confirm the operation by selecting the "YES" item with "◄" and "►" buttons and pressing the "↵" button. Blinking "rESt" message will appear on the indicator, which warns on the beginning of factory settings recovery operation. Do not perform any actions and wait until the "donE" message appears, informing about successful operation completion, or "FAIL" error message. After recovering the factory settings, the "zero" adjustment of AIR-20/M2-H should be performed in accordance with paragraph 2.4.8.32.

2.4.9 Self-testing messages

2.4.9.1 AIR-20/M2-H has an option of self-testing of different sensor modules operation and informing about sensor condition and errors occurring in the course of operation. Possible self-testing messages and their descriptions are indicated in Table 2.22.

Table 2.22

Message on the indicator	Description	Malfunction correction
Err1	System error. Repair or calibration required	Switch off then switch on power supply of the transmitter. If the message did not disappear, repair or calibration is required
Err4	Error while parameters loading	Switch off then switch on power supply of the transmitter. If the message did not disappear, sensor repair is required
Err6	Error while parameters testing	Switch off then switch on power supply of the transmitter. If the message did not disappear, sensor repair is required
nrdY	Data not ready	If the message did not disappear, sensor repair is required
donE	Operation completed successfully	Operation completion message
FAIL	Operation failed	Check the correctness of performed actions (values correspondence to the set range etc)
Er12	The value of the adjusted parameter is outside the acceptable range	Check the values accordance to the set range
AcdE	Parameter editing is prohibited or entered password is incorrect	If the entered password is incorrect, parameter editing will be prohibited. In order to edit the parameters exit from the menu and enter it again entering the correct password. Do not try to edit the parameters that are read-only.
YES	Password is correct	Password accepted, editing is permitted
rESt	Notification on the beginning of factory settings recovery operation	
LO	The measured value is below the lower measurement range limit by 1.25 % of the range;	Change the measurement and conversion range or increase the system pressure
HI	The measured value is above the upper measurement range limit by 12.5 % of the range;	Change the measurement and conversion range or decrease the system pressure

2.5 Marking

2.5.1 Marking is performed in accordance with GOST 26828-86 E, GOST 22520-85, and NKGZH.406233.054СБ drawing.

2.5.2 Marking of explosion-proof transmitters

2.5.2.1 Marking plate with explosion-proof marking "0ExiaIICT6 X" is installed on side surface of explosion-proof transmitters AIR-20Ex/M2-H housing and the following data is indicated:
environment temperature range (depending on the configuration):

- -40 °C ≤ t_a ≤ +70 °C;
- -55 °C ≤ t_a ≤ +70 °C;
- -10 °C ≤ t_a ≤ +70 °C;
- -25 °C ≤ t_a ≤ +70 °C;
- -25 °C ≤ t_a ≤ +80 °C;
- -25 °C ≤ t_a ≤ +70 °C;

- spark-proof electrical parameters:
  - maximum input current I_i: 120 mA;
  - maximum input voltage U_i: 28 V;
  - maximum internal capacitance C_i: 0.05 μF;
  - maximum internal inductance C_i: 0.2 mH.
  - maximum input power Pi: 0,8 W.

2.5.2.2 Marking of explosion-proof transmitters AIR-20Exd/M2-H.
The following data is indicated on outer side of the cover of the transducer mount AIR-20Exd/M2-H:
- explosion-proof marking "1ExdIICT6 X";
- warning notice "WARNING: OPEN ONLY WHEN SWITCHED OFF".

Environment temperature range (depending on the configuration) is indicated on side surface of AIR-20Exd/M2-H housing :

- -40 °C ≤ t_a ≤ +70 °C;
- -55 °C ≤ t_a ≤ +70 °C;
- -10 °C ≤ t_a ≤ +70 °C;
- -25 °C ≤ t_a ≤ +70 °C;
- -25 °C ≤ t_a ≤ +80 °C;
- -25 °C ≤ t_a ≤ +70 °C.

2.5.2.3 AIR-20/M2-H of oxygen configuration are marked with "O_2". Notice "Oxygen. Use no oil" is located on the housing of AIR-20/M2-H electronic transmitter of oxygen configuration.
2.5.3 Marking method: plate gluing (with double-sided sealing tape), using silk-screening method, which preserves the marking over the lifespan.

2.5.4. Sealing of AIR-20Exd/M2-H is not performed on the manufacturing plant. Sealing of AIR-20Exd/M2-H is performed by the customer on site.

2.6 Package

2.6.1 Packaging is performed in accordance with GOST 23170-78E.

2.6.2 Packaging of AIR-20/M2-H is performed in enclosed spaces at ambient air temperatures between +15 and +40 °C and relative humidity of 80 % in the absence of agressive impurities in the environment.

2.6.3 Before packaging, cable holes and connections holes are closed with caps or plugs, which protect the inner cavity from contamination and the thread from mechanical damages.

Before packaging of AIR-20/M2-H of oxygen configuration, degreasing and cleaning of working cavity, plugs, and connections are performed in accordance with RD 92-0254

Cleaned and degreased installation kit parts of AIR-20/M2-H of oxygen configuration are packaged separately from uncleaned ones.

3 PRODUCT INTENDED USE

3.1 Product preparation for use

3.1.1 Safety precautions

3.1.1.1 Safe operation of AIR-20/M2-H is ensured by:

- durability of measurement chambers, that correspond norms established in paragraphs 2.2.17, 2.2.18;
- isolation of electric circuits corresponding to norms established in paragraphs 2.2.20, 2.2.21;
- secure mounting during installation on site;
- construction (all component parts of the transmitter that are under voltage are located in a housing, protecting the service personnel from contacting with parts and nodes under voltage).

3.1.1.2 Electric shock hazard protection of AIR-20/M2-H is compliant with class III in accordance with GOST 12.2.007.0-75.

3.1.1.3 Grounding is realized through washer screws located on the housing of AIR-20/M2-H.

3.1.1.4 During the testing AIR-20/M2-H, the general safety requirements in accordance with GOST 12.2.091-2013 should be followed; during the operation, Rules for Operation of Customers' Electrical Installations and Safety Rules for Operation of Customers' Electrical Installations for installations of up to 1000 V approved by Government Inspectorate for Industrial Energy Applications and Energy Supervision should be followed.

3.1.1.5 AIR-20/M2-H should be maintained by the personnel with safety certification level of grade II or higher in accordance with Safety Rules for Operation of Customers' Electrical Installations.

3.1.1.6 During the isolation testing and isolation resistance measurement, the safety requirements applied to the testing equipment should be followed.

3.1.1.7 Replacement, connection and disconnection of AIR-20/M2-H from main lines, supplying the analyzed medium, should be performed in the absence of pressure in main lines and with power supply switched off.

3.1.1.8 In accordance with NP–001–97 (General Safety Regulations – 88/97), transmitters AIR-20A/M2-H, AIR-20AEx/M2-H (enhanced reliability) belong to safety classes 2,3, or 4:

- by intended use: to components of normal operation (N);
- by safety impact: to safety related components;
- by type of functions performed: to controlling components (C).

The example of classified designation: 2, 2NC, 2C, 2N, 3, 3NC, 3C, 3N, or 4.

3.1.1.9 AIR-20A/M2-H is fire-proof, i.e. fire risk of the mentioned transmitters does not exceed 10^{-6} per year in accordance with GOST 12.1.004-91 both in normal and emergency operation of NP. The fire is considered to be an outbreak of open fire on outer surfaces of the transmitters or ejection of ignescent particles.

3.1.1.10 During testing and operation of AIR-20A/M2-H and AIR-20AEx/M2-H, the requirements of NP-001-97 (General Safety Regulations-88/97), PNAE G-1–024–90 (Nuclear Safety Regulations for Reactor Plant Equipment of NP-89), NP-016-05 (General Safety Regulations for Open Nuclear Fuel Cycle) should be followed.

3.1.1.11 Operation of AIR-20/M2-H of oxygen configuration should be performed with compliance with safety requirements established by GOST 12.2.052-81, GOST 12.2.003-74, Rules for Design and Safe Operation of Pressure Vessels, approved by State Committee for Supervision of Safe Working Practices in Industry and for Mine Supervision, Safety and Industrial Sanitation Rules for Oxygen Manufacture, OST 26-04-2158-78, OST 26-04-2574-80, STP 2082-594-2004.

3.1.1.12 Before the beginning of operation the inner cavity of AIR-20/M2-H of oxygen configuration, that contacts with oxygen, should be degreased.

3.1.2 Exterior check

3.1.2.1 During the exterior check the absence of mechanical damage, marking conformity, and instrument completeness should be checked.

If there are any defects, affecting the operating capacity of AIR-20/M2-H, completeness or marking mismatch, the possibility of its further use should be determined.

3.1.2.2 The presence of passport with Quality Control Department mark should be cecked for every AIR-20/M2-H.

3.1.3 Testing

3.1.3.1 Before switching on the correspondence of installation and mounting of AIR-20/M2-H to instructions outlined in paragraph 3.1.4 of this manual.

3.1.3.2 Connect the AIR-20/M2-H to power supply and to the measurement instrument in accordance with Figures 3.1, 3.2, or 3.3, 3.4.

3.1.3.3 Warm up the AIR-20/M2-H for at least 5 minutes.

3.1.3.4 Ensure the operating capacity of AIR-20/M2-H from the readings of the measurement instrument.

3.1.3.5 Check and adjust the "zero" if necessary. For this purpose:

– apply zero excess pressure to the input for AIR-20/M2-H-EP, EEP, ExpP, HP; zero absolute pressure (absolute pressure on input should not exceed 0.01 % of P_{Bmax}) for AIR-20/M2-H-AP; zero pressure differential for AIR-20/M2-H-DP;

– set the "zero" in accordance with paragraph 2.4.8.29 of this manual.

Program adjustment of "zero" and output signal range can be performed using HARTconfig software. Measured variable value should be within the measurement range limits**.**

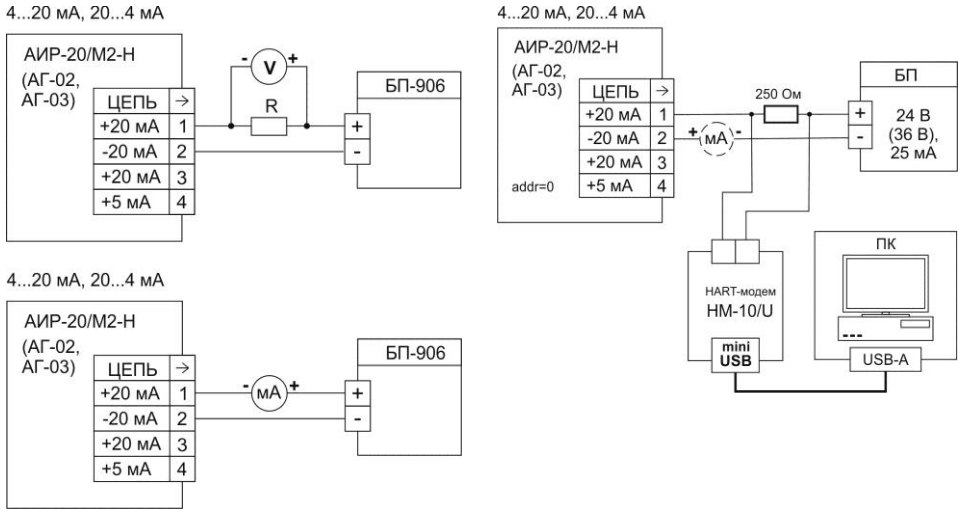

мА – mA
Цепь – circuit
HART-модем – HART-modem
ПК – PC

R – reference standard resistance coil;
V – voltmeter.
mA – milliamperemeter.

Figure 3.1 - Electrical connection diagram.
Version with **"K1+"** polarity of power supply connection

мА – mA
Цепь – circuit
Кабель К6 из комлекта ИКСУ-260 – Cable K6 from IKSU-260 kit

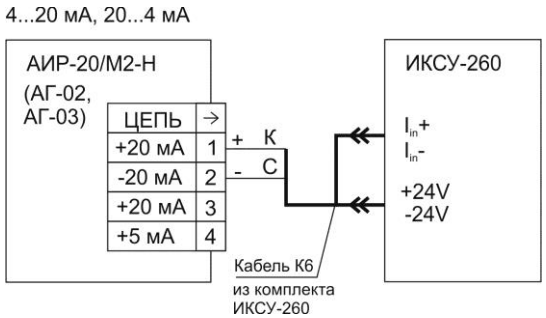

MCSR-260 – reference standard calibration-measurement unit for unified signals produced by SPC "ELEMER", Ltd

Figure 3.2 - Electrical connection diagram
Version with **"К1+"** polarity of power supply connection

мА – mA
Цепь – circuit
HART-модем – HART-modem
ПК – PC

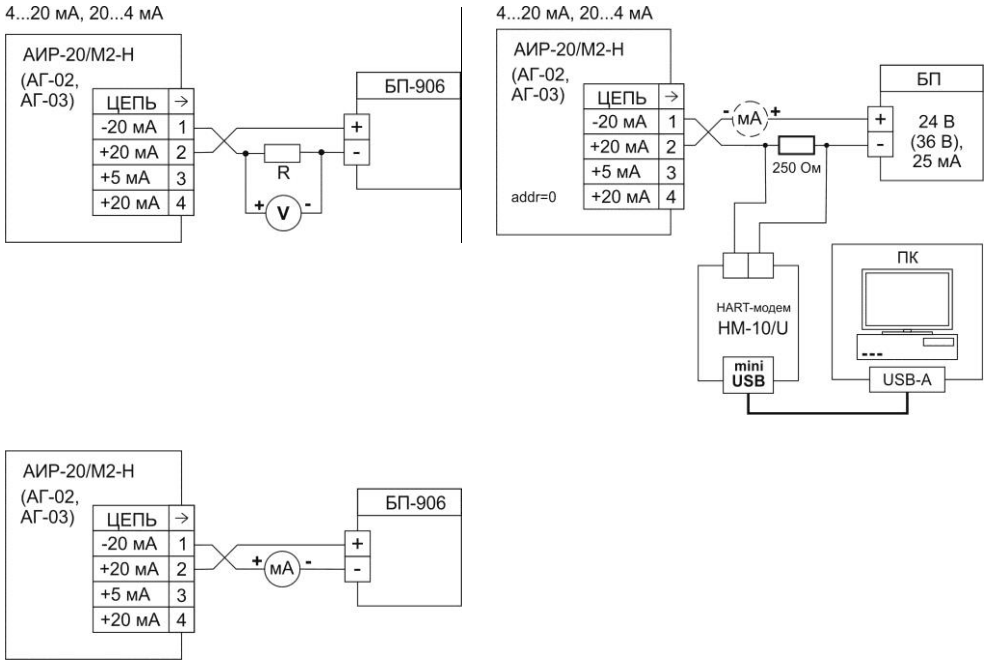

R – reference standard resistance coil;
V – voltmeter;
mA – milliamperemeter.

Figure 3.3 - Electrical connection diagram.
Version with **"К1-"** polarity of power supply connection

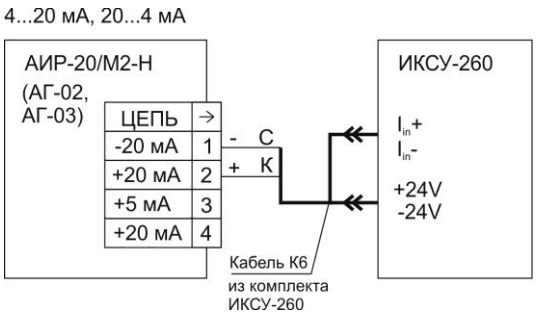

Figure 3.4 - Electrical connection diagram
Version with **"К1-"** polarity of power supply connection

мА – mA
Цепь – circuit
Кабель К6 из комлекта ИКСУ-260 – Cable K6 from IKSU-260 kit

3.1.4 Product installation

3.1.4.1 AIR-20/M2-H is installed on site in a position convenient for operation and maintenance. The hydrostatical pressure transmitters assembly order is outlined in paragraph 3.1.4.10. Depending on controlled medium parameters and pressure take-off conditions, AIR-20/M2-H-DP is installed in accordance with Figures 3.5 - 3.8. It should be considered that transmitter orientation, especially with upper measurement limit of ±0,063 kPa – ±10 kPa, may cause the offset and therefere it will be neccessary to adjust the initial signal for a value, depending on operating force, transmitter sensitivity and its tilt. When choosing the installation location AIR-20/M2-H the following should be considered:

- AIR-20/M2-H of general purpose industrial and oxygen configuration cannot be installed in explosion hazardous spaces; AIR-20Ex/M2-H and AIR-20Exd/M2-H can be installed in explosion hazardous spaces;
- transmitters installation spaces should ensure convenient conditions for maintenance and dismounting;
- when installing AIR-20Exd/M2-H in explosion hazardous areas (in accordance with the marking) the instrument connection should be realized with cable that ensures compliance with the explosion protection requirements, with outer diameter compliant with applied types of cable entry (see Table B.1 of Appendix B).

For a better field of view of the indicator or for easy access to both chambers of sensor electronic unit (to terminal connector block and control buttons), the electronic unit housing can be rotated at ±135° angle towards sensor unit.

In order to rotate the electronic unit housing towards sensor unit:

- release retention screws;

- rotate the electronic unit housing around vertical axis at a required angle within ±135°;
- tighten retention screws;

For convenient reading the LCD-indicator can be rotated by hand for a required angle.

3.1.4.2 Pressure measurement accuracy depends on the correct installation of the transmitter and impulse lines from pressure take-off place to the transmitter. Connection tubes should be laid on the least distance. It recommended to perform pressure take-off in places where medium velocity is minimum, flow is not whirling, i.e. on straight-line sections of the pipeline at maximum distance from locking devices, pipe elbows, compensator and other hydraulic connection. At fluctuating medium pressure, hydraulic and gas shocks, the connection tubes should be equipped with outlets in shape of loop subduers.

The measured medium temperature in working cavity of the transmitter should not exceed the accepted environment air temperature. Since there are no medium flow in the transmitter working cavity, the temperature at the transmitter input usually does not exceed 120 °C. In order decrease the measured medium temperature on the working cavity input, the transmitter should be installed on the connection line, which recommended length for AIR-20/M2-H-DP is at least 3 m, for the other sensor - at least 0.5 m. The designated lengths are indicative and depend on the medium temperature, connection line diameter and material and can be reduced. To exclude mechanical impact of pressure transmitters from impulse lines the connection lines attachment should be envisaged.

AIR-20/M2-HP are intended for technological processes with slowly varying working medium temperature. To achieve maximum measurement accuracy the measured medium temperature in open membrane area should differ from environment air temperature for no more than ±5 ˚C.

Impulse lines should have one-way inclination (at least 1:10) from pressure take-off place upwards to the transmitter if the measured medium is gas and downwards the transmitter if the measured medium is fluid. If this is not possible, then slop vessels (when measuring gas pressure or gas pressure differential at low points of the connection line) or gas collectors (when measuring fluid pressure or fluid pressure differential at high points) should be installed.

It recommended to install slop vessels in front of the transmitter and in other cases, especially when the connection lines are long and when the transmitter is located below the pressure take-off place.

The recommended connection line diagram when measuring gas, vapor, and fluid are shown in Figures 3.5 – 3.8.

Impulse line diagram when measuring gas flow rate

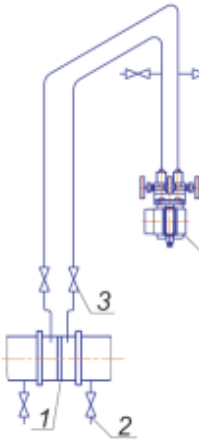

Figure 3.5

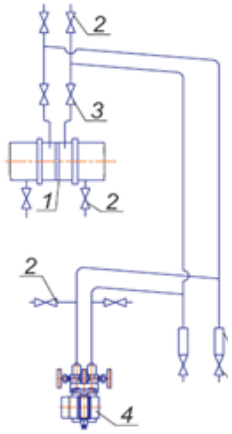

Figure 3.6

Designations for Figures 3.5 and 3.6:

1 - constriction device;
2 - blow-off valve;
3 - valve;
4 - sensor;
5 - slop vessel.

Impulse line diagram when measuring vapor flow rate

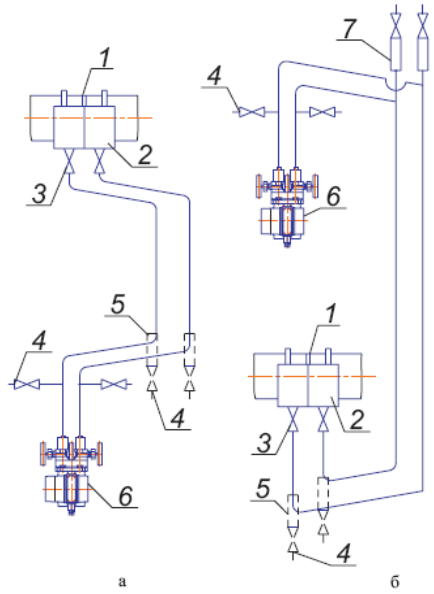

Figure 3.7

Designations for Figure 3.7:

1 - constriction device;
2 - levelling vessel;
3 - valve;
4 - blow-off valve;
5 - slop vessel.
6 - sensor;
7 - gas collector;

Impulse line diagram when measuring fluid flow rate

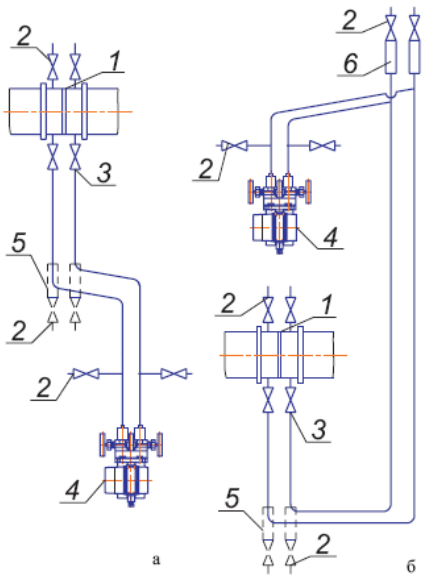

Figure 3.8

Designations for Figure 3.8:

1 - constriction device;
2 - blow-off valve;
3 - valve;
4 - sensor;
5 - slop vessel.
6 - gas collector;

The independent devices should be envisaged for impulse line blow-off.

It is recommended to install two two-way or one three-way taps from pressure take-off place to the pressure transmitter in impulse line in order to switch off the transmitter from the line and switch it on to the atmosphere. This will simplify periodic installation monitoring of the output signals, compliant with lower value of measured pressure and transmitter dismounting.

It is recommended to install a valve (or a ball valve) on every line to connect the line with atmosphere and a valve to disconnect the transmitter in impulse lines from the constriction device to the pressure differential transmitter.

AIR-20/M2-H can be supplied with valve blocks.

The connection of the transmitter to the impulse line is performed is performed with nipple preliminary welded to tube line or with mounting flange with taper screw thread K1/4″ or K1/2″ GOST 6111-52 for screwing on line tube ends (upon customer's choice). Tightening of taper screw thread is performed with fluoroplastic band or faolite compound (50 % of faolite plate edge dissolved in 50 % of bakelite varnish) depending on the measured medium.

The lines should be blown out thoroughly before connecting to the transmitters to reduce the possibility of pollution of the transmitter sensor unit chambers.

Before installation of transmitter of oxygen configuration it is necessary to ensure that "Degreased" stamp is present in transmitter's passport. Before connecting the transmitter the connection lines should be blown out with clean compressed air or nitrogen. Air or nitrogen should not contain oils. Avoid ingress of greases and oils into transmitter cavities during the installation. In case of grease or oil ingress, degreasing of the transmitter and the connection lines should be performed.

Degrease installation elements tangent to oxygen before installation.

3.1.4.3 After finishing the installation of the transmitters it is necessary to inspect junction points for leakproofness at maximum operating pressure. Pressure decay in 15 min should not exceed 5 % of maximum operating pressure.

3.1.4.4 Housing grounding of the transmitter is performed with wire with 1,5 mm^2 section from instrument grounding bar to special clip.

3.1.4.5 Communication lines installation

It is recommended to apply control cables with PVC (e.g. CVVGE cable) isolation for communication line laying during the installation. Other cables with 1,5 mm^2 core section may be applied.

It is recommended to apply shielded cable with isolation envelope if electricity-generating equipments with a capacity of more than 0,5 kW are being close to communication line laying site.

The connection of communication line to the transmitter is performed through cable input holes with further tightening. Unused cable input should be plugged

hermetically.

3.1.4.6 Installation of transmitters with connectors.

It is recommended to perform socket soldering with multicore cable with 0.35-0.5 mm^2 core section of MGTF TU16-505.185 or MGSV TU16-505.437 type during the installation of the transmitters.

3.1.4.7 Installation of transmitters with HART-protocol.

Shielded twisted pair should be used during the installation. The screen should be grounded on receiving side only near load resistance. Unshielded cable may be used if electric interference in the line does not affect the communication quality. Conductor diameter should be 0.51-1.38 mm if total cable length is less than 1500 m and 0.81-1.38 mm if total cable length is more than 1500 m.

3.1.4.8 "Multiple-point" transmitter with HART-protocol operation mode

In "multiple-point" mode the transmitter operates with digital output only. Analog signal is set automatically to 4 mA and is not affected by output pressure. Pressure data is retrieved over HART-protocol. Up to 15 sensors can be connected to a single wire pair. The amount of transmitters is defined by voltage decrease in the communication line as well as by voltage and capacity of the power supply unit. Every transmitter in "multiple-point" mode has its unique address from from 1 to 15 and access to the transmitter is performed at this address. AIR-20/M2-H in normal mode has 0 address. Is address from 1 to 15 is assigned, the transmitter automatically switches to "multiple-point" mode and sets the output current to 4 mA. Communicator or SCADA define the transmitters and able to operate with every of them.

If it is necessary to switch the "multiple-point" mode in spark-proof circuit, then no more than two AIR-20M2-H can be connected to single wire pair. This is due to necessity to maintain the accepted value of total capacity in sensor power supply circuit.

3.1.4.9 The following should be considered when choosing external connection diagram:

1) for galvanically coupled transmitter power supply circuits with double-wire communication line and 4-20 mA output signal it is acceptable to ground every transmitter's load, but from power supply side only;

2) for galvanically divided transmitter power supply channels it is acceptable:

- to ground one of load lead of every transmitter;
- to connect loads to each other of several transmitters as long as no more than one load lead of every transmitter is interconnected;

3) it is recommended to use individual galvanically isolated power supply channels for pressure transmitters with fouir-way communication line;

4) it is recommended to use individual galvanically isolated power supply channels for pressure transmitters to lower the interference level of analog and (or) digital signal based on HART-protocol.

It is acceptable to connect condenser in a parallel with resistance load in order to lower the pulsation level of the transmitter output signal. In this case the condenser with minimum capacity providing the acceptable pulsation level should be used. It is recommended to use the condensers with operating voltage of at least 50 V and with leakage current not exceeding 5 μA for 4-20 mA signal and not exceeding1 μA for 0-5 mA signal. It is not accepted

to install additional capacitance on load resistance for transmitters with digital output signal based on HART-protocol.

Electric installation of AIR-20/M2-H should be performed in accordance with electric circuit diagrams shown in Figures 2.6 - 2.33, 2.42 - 2.44.

Electric installation of explosion-proof transmitters AIR-20Ex/M2-H should be performed in accordance with electric circuit diagrams shown in Figures 2.34 - 2.41.

3.1.4.10. Installation order of the hydrostatical pressure transmitter:

1. Install the first section of the transmitter with protection clamp down.
2. Holding the section, insert the pipe of the second transmitter section with installed captive ring and captive nut 1 into coupling fitting 2 (Figure3.9), so that front captive ring fits snugly in fitting 2 mounting base.
3. Tighten nut 1 of the second section with hand.
4. Tighten nut 1 with 25 wrench until markings on nut 1 flats are combined with fitting 2 marking and make a 1/4-turn more after that. Fitting 2 should be fixed with second 25 wrench at the same time.
5. Repeat steps 1-4 with all the rest transmitter sections.
6. Install disc 4 on the last section in the required position by releasing and tightening nut 3 of cable entry with 30 wrench.
7. Tighten nut 5 on the last transmitter section with 17 wrench.
8. Lock in the transmitter in the workspace in accordance with installation design requirements.

WARNING! Do not hold the fitting with the cable coming out from the last transmitter section.

The work should be performed by two persons.

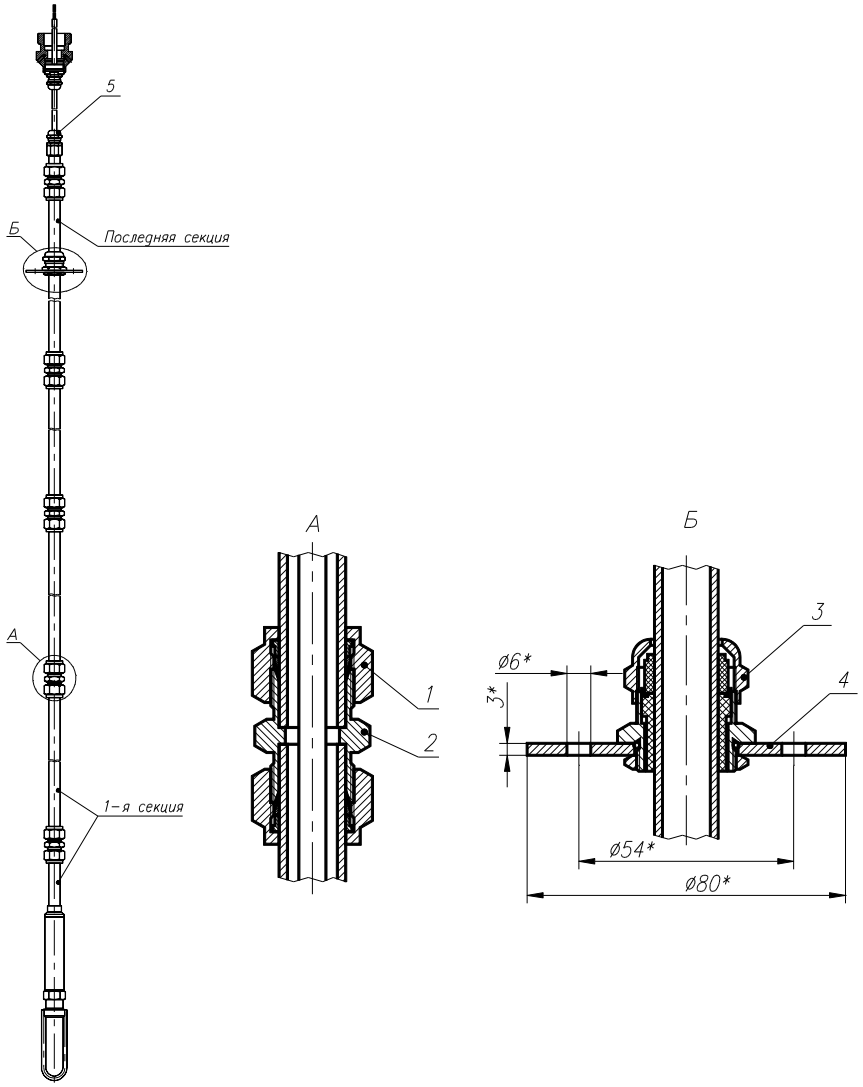

Последняя секция – Last section
1-я секция – First section

Designations for Figure 3.9:
1 – nut with across flat 25;
2 – fitting with across flat 25;
3 – nut with across flat 30;
4 - disc;
5 – nut with across flat 17;

Figure 3.9

3.2 Product use

3.2.1 When applying the measured pressure *P* to the input of AIR-20/M2-H the pressure value is determined according to the formulae

$$P = \frac{I - I_H}{I_B - I_H} \cdot (P_B - P_H) + P_H \qquad (3.1)$$

- for linear descending dependency

$$P = \frac{I - I_B}{I_H - I_B} \cdot (P_B - P_H) + P_H \qquad (3.1.1)$$

- for square root ascending dependency

$$P = \left(\frac{I - I_H}{I_B - I_H} \right)^2 \cdot (P_B - P_H) + P_H \qquad (3.2)$$

- for square root descending dependency

$$P = \left(\frac{I - I_B}{I_H - I_B} \right)^2 \cdot (P_B - P_H) + P_H \qquad (3.1.2)$$

all the designations explaine in paragraph 2.2.3.

4 VERIFICATION PROCEDURE

4.1 Verification of AIR-20/M2-H is performed by local metrology service authorities or other accredited institutions. Requirements to institutions, procedure for the conduct of verification and form of presentation of verification results are defined by the form established in Arrangements for Calibration of Measuring Instrument, Requirements for Verification Mark and Contents of Verification Certificate, approved by the order No. 1815 by Ministry of Industry and Trade of the Russian Federation from 2 July 2015 and in Measuring Pressure Transmitters AIR-20/M2. Verification methods. NKGZH.406233.028МП, approved in accordance with the established procedure.

4.2 During the verification of AIR-20/M2-H with phase separator (PS) the combined error γ is calculated according to the formula

$$\gamma = \left| \gamma_0 + \gamma_1 \right| ,$$

where γ_0 – the limit of accepted basic percentage error of AIR-20/M2-H (see Table 2.5 "Limits of accepted basic percentage error");

γ_1 – additional error contributed by PS (see Table B.5 "Setting up the phase separator").

4.3 Interval between verifications is five years:

4.4 Verification method NKGZH.406233.028МП can be applied for calibration of AIR-20/M2-H.

5 MAINTENANCE

5.1 The maintenance of AIR-20/M2-H comes down to following the regulations for operation, storage, and transport outlined in this user manual, preventive examinations, periodic verifications and repair operations.

5.1.1 The maintenance of AIR-20/M2-H of oxygen configuration generally consists of periodic verification and condensate disposal from operating chambers of AIR, cleaning and degreasing the inner cavities, and maintenance check.

5.2 Preventive examinations are performed according to the procedure established on AIR-20/M2-H operation facilities and include:

- external examination;
- system hermeticity test (if necessary);
- AIR-20/M2-H holding strength test, grounding wire break check;
- functional inspection;
- inspection of AIR output signal value setting, compliant with zero value of measured pressure in accordance with paragraph 3.1.3;
- electric resistance isolation check.

5.3 Periodic verification of AIR-20/M2-H is performed in accordance with the instructions contained in section 4 of this user manual.

5.4 AIR-20/M2-H with defects that are irremovable during the examination or the instruments that did not pass periodic verification are subject to operating repair.

The repair of AIR-20/M2-H is performed in the manufacturing plant.

5.5 Explosion-proofness assurance during the operation.

5.5.1 During the operation of AIR-20Ex/M2-H, AIR-20Exd/M2-H sensor it is necessary to be guided by section "Explosion-proofness assurance during the installation" of this user manual, current Electrical Installation Regulations, Rules for Operation of Customers' Electrical Installations, chapter 3.4 of «Electrical Installations in Explosion Hazard Areas",

The repair of AIR-20Ex/M2-H, AIR-20Exd/M2-H is performed by the manufacturer in accordance with the requirements of GOST 30852.13-2002.

The frequency of preventive examinations of the transmitters is established depending on operating conditions of pressure transmitters.

During the preventive examinations all the work on exterior check as well as the following activities should be performed:

- after switching the transmitters off from the power supply open the cover of the electronic unit. Carry out an inspection of explosion-proof surfaces (for AIR-20Exd/M2-H). If there are surface damages, the

transmitter should be sent for repairs. Sensor units should be repaired in the manufacturer site.

- when back cover of AIR-20/M2-H is removed, ensure that electrical contacts are secure, excluding the possibility of heating and short circuit, and check the grounding isolation resistance;
- check the reliability of input cable gland;
- check the terminal connector block condition. The terminal connector block should not have chippings and other damages;
- after the installation of AIR-20/M2-H back cover seal the sensor.

6 STORAGE

6.1 Storage conditions of AIR-20/M2-H in transport package in manufacturer and customer should correspond to conditions 3 of GOST 15150-69.

Aggressive impurities should not be present in the air.

6.2 Location of AIR-20/M2-H in storage facilities should ensure free access to them.

6.3 AIR-20/M2-H should be stored on shelves.

6.4 The distance between walls, storage facility floor and AIR-20/M2-H should be at least 100 mm.

7 TRANSPORTATION

7.1 AIR-20/M2-H is transported by all types of transport in covered vehicles. Packaging attachment in vehicles should be carried out in accordance with regulations used for corresponding type of transport .

7.2 Transportation terms of AIR-20/M2-H should correspond to condition 5 of GOST 15150-69 at environment air temperature from -50 to +50 °C in compliance with shocks and vibrations prevention measures.

7.3 Transportation of AIR-20/M2-H should be carried out with instruments packed in bags or individually.

AIR-20/M2-H transportation in boxes should be carried out in accordance with GOST 21929-76 requirements.

8. DISPOSAL

8.1. AIR-20/M2-H does contain hazardous materials and matters that require special disposal methods.

8.2. After the expiry of service life, AIR-20/M2-H are subject activities on preparation and shipping for disposal. In that process, technical standard documents on disposal, adopted in the operating company.

APPENDIX A

OVERALL, CONNECTION AND MOUNTING DIMENSIONS OF

OF DIFFERENTIAL PRESSURE TRANSMITTERS

AIR - 20/M2-H, AIR-20 Exd/M2-H

Housing type AH-02

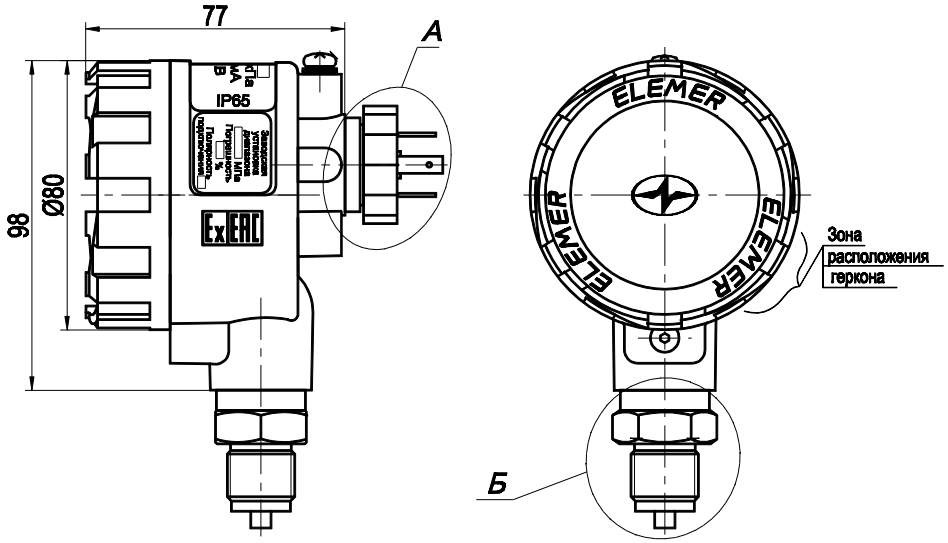

Зона расположения геркона – Hermetic contact zone

Variants of electric connections (place A) are contained in Appendix B and connection dimensions (place B) are contained in Appendix A.

Appendix A continued

Visual appearance of AIR 20/M2-H with glass cover

LED indicator LCD indicator

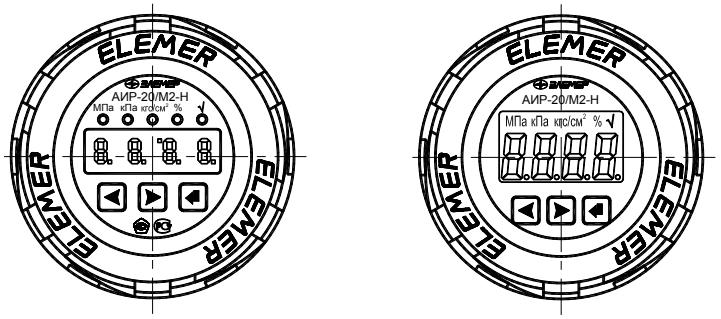

Indication plate can be rotated
(LED indicator with opened cover is shown as an example)
Indication plate rotated for 90°

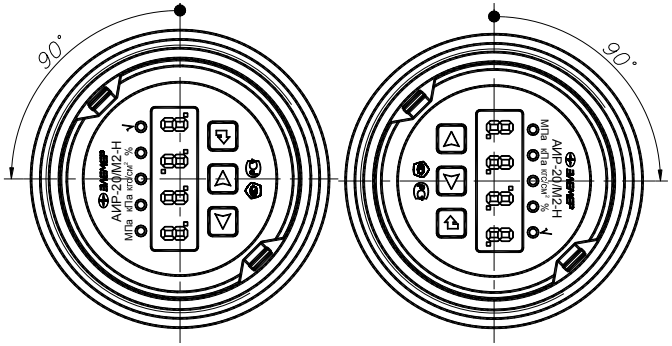

Indication plate rotated for 180°

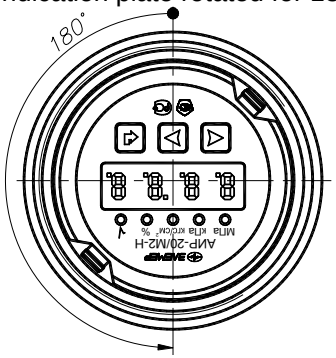

Figure A.1

APPENDIX A CONTINUED
OVERALL, CONNECTION AND MOUNTING DIMENSIONS OF
OF DIFFERENTIAL PRESSURE TRANSMITTERS
AIR-20/M2-H, AIR-20Exd/M2-H

Housing type AH-03

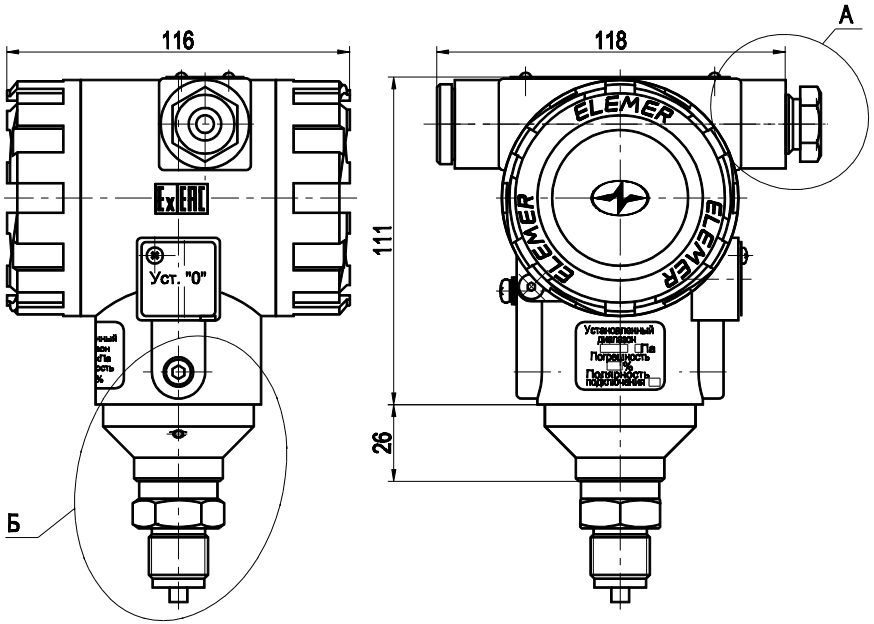

Figure A.2

Уст. 0 – Set 0
Установленный диапазон – Set range
Па – Pa
Погрешность – Error
Полярность подключения – Connection polarity

Исполнение корпуса с глухой крышкой – Housing with blank cover configuration
ПРЕДУПРЕЖДЕНИЕ – ОТКРЫВАТЬ, ОТКЛЮЧИВ ОТ СЕТИ – WARNING: OPEN ONLY WHEN SWITCHED OFF
Кабельный ввод – Cable input
Корпус – Housing
Сплав АК-12 – Alloy AK-12
ГОСТ 1583-93 – GOST 1583-93
Взрыв – Explosion
Фильтр-заглушка - Blank-filter plug

1. Void volume of explosion-proof enclosure is 150 cm^3. Testing pressure is 2.0 MPa.
2. Wall thickness in the thickest spots of the housing blind holes is at least 3 mm.
4. In thread joints marked with “Взрыв” (“Explosion”) word, there are at least 5 coupling.
5. Seal on site only when mounting and adjustments are finished.

Чертеж средств взрывозащиты. Рисунок А.3 – Means of explosion protection diagram. Figure A.3

Appendix A continued

OVERALL, CONNECTION AND MOUNTING DIMENSIONS OF OF DIFFERENTIAL PRESSURE TRANSMITTERS

AIR-20Exd/M2-H

Housing type AH-02

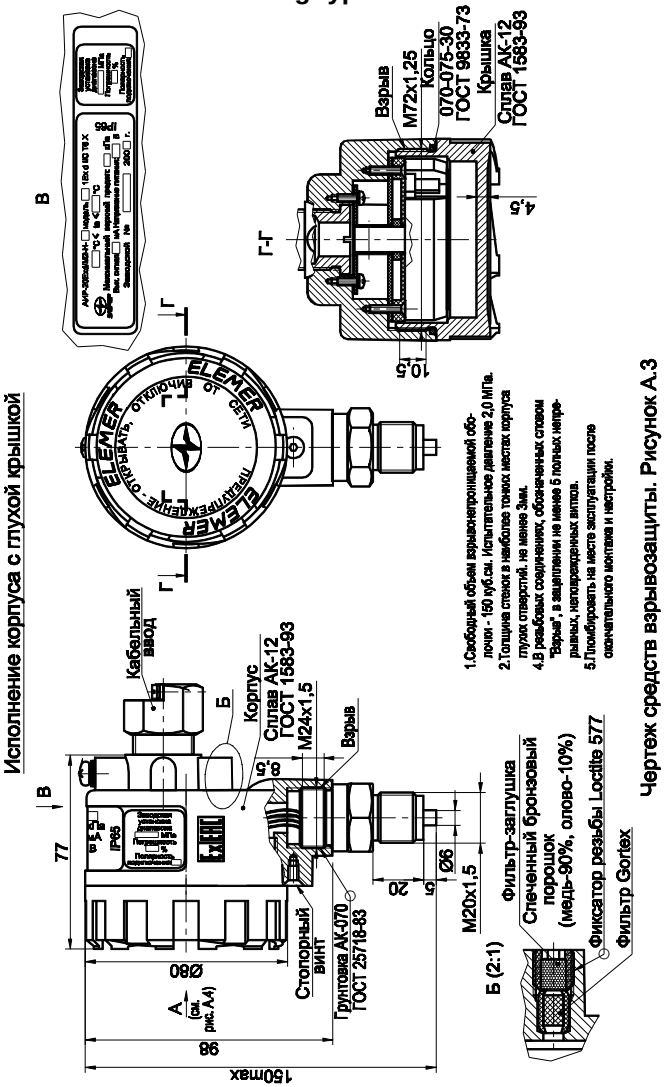

Чертеж средств взрывозащиты. Рисунок А.3

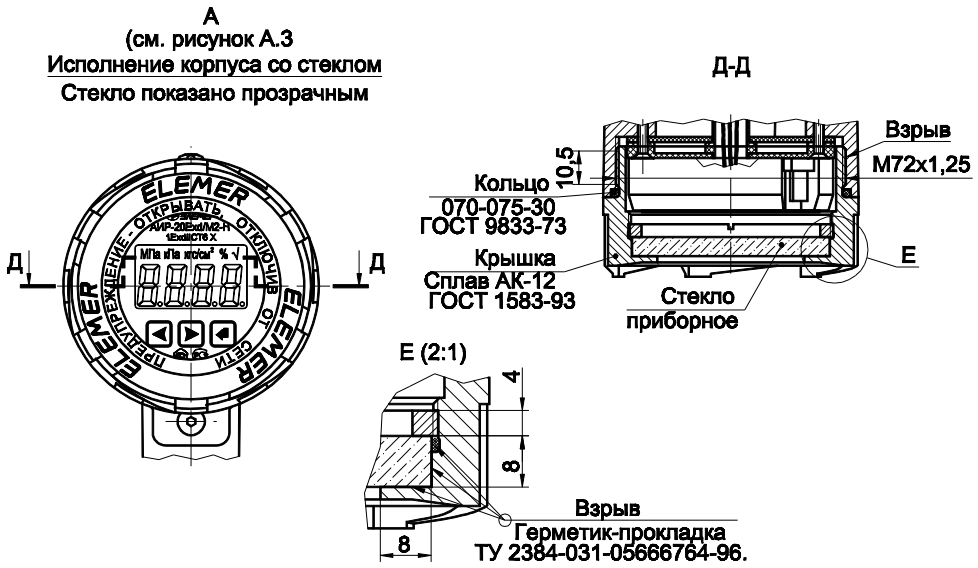

Чертеж средств взрывозащиты. Рисунок А.4

(см. рисунок А.3. Исполнение корпуса со стеклом) – (see Figure A.3. Housing with glass configuration)
Стекло показано прозрачным – The glass is shown as transparent
ПРЕДУПРЕЖДЕНИЕ – ОТКРЫВАТЬ, ОТКЛЮЧИВ ОТ СЕТИ – WARNING: OPEN ONLY WHEN SWITCHED OFF
Кольцо – Ring
Взрыв – Explosion
ГОСТ 9833-73 – GOST 9833-73
Сплав АК-12 – Alloy AK-12
ГОСТ 1583-93- GOST 1583-93
Стекло приборное – Instrument glass
Герметик-прокладка – Sealant filling
Чертеж средств взрывозащиты. Рисунок А.4 – Explosion protection means diagram. Figure A.4

Appendix A continued

OVERALL, CONNECTION AND MOUNTING DIMENSIONS OF OF DIFFERENTIAL PRESSURE TRANSMITTERS

AIR-20Exd/M2-H

Housing type AH-03

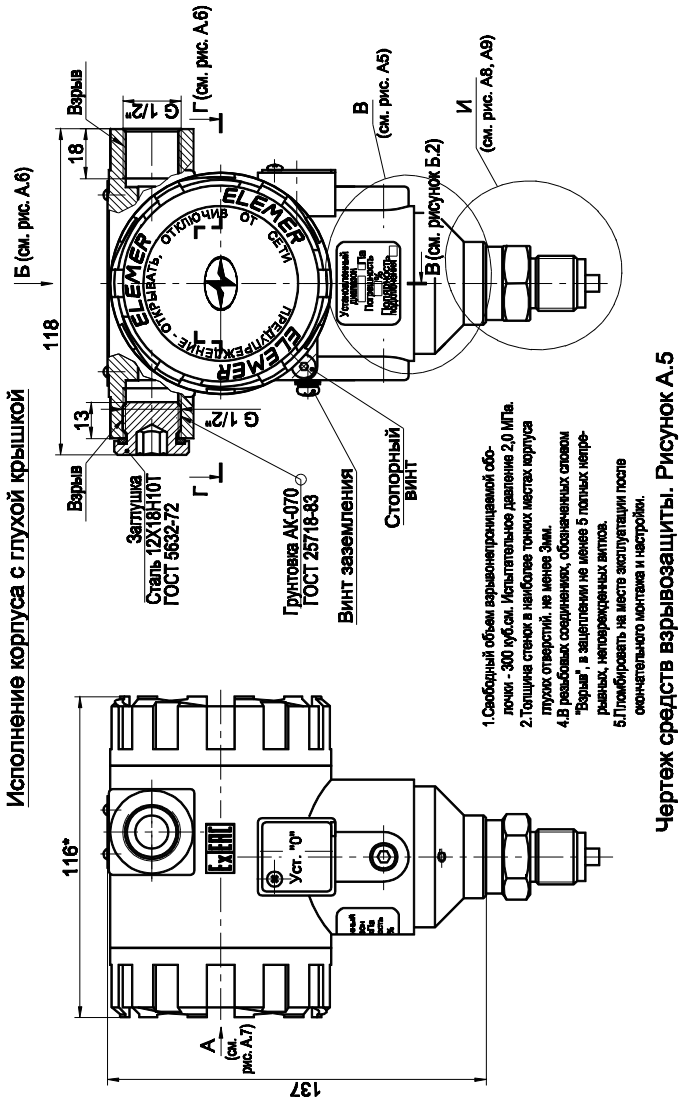

Чертеж средств взрывозащиты. Рисунок А.5

Appendix A continued

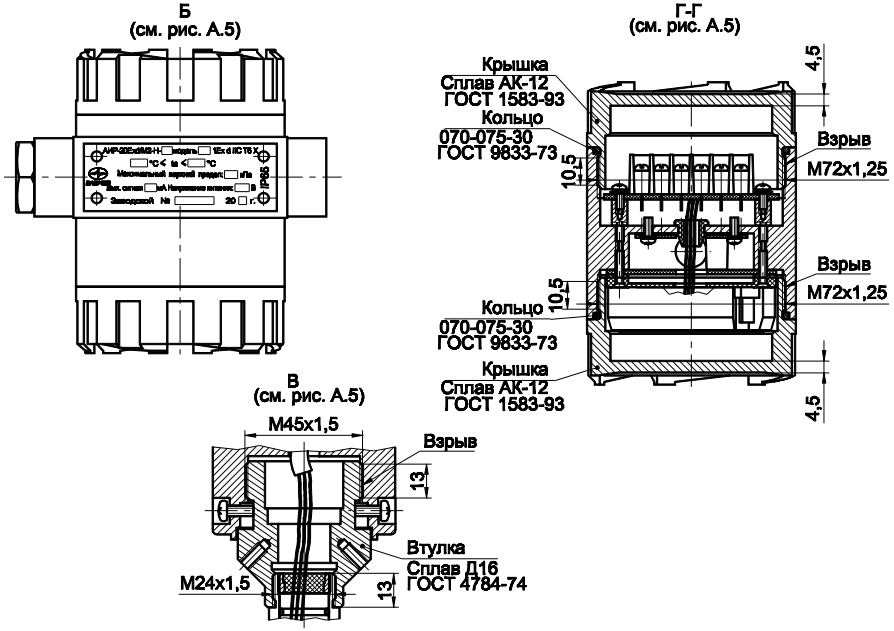

Чертеж средств взрывозащиты. Рисунок А.6

(см. рис. А5) – (see Figure A.5)
Сплав АК-12 – Alloy AK-12
ГОСТ 1583-93 – GOST 1583-93
Кольцо – Ring
ГОСТ 9833-73 – GOST 9833-73
Крышка - Cover
Взрыв – Explosion
Втулка - Hub

Чертеж средств взрывозащиты. Рисунок А.6 – Explosion protection means diagram. Figure A.5

(см. рисунок А.5) – (see Figure A.5)
Исполнение корпуса со стеклом - Housing with glass configuration
Стекло показано прозрачным – The glass is shown as transparent
ПРЕДУПРЕЖДЕНИЕ – ОТКРЫВАТЬ, ОТКЛЮЧИВ ОТ СЕТИ – WARNING: OPEN ONLY WHEN SWITCHED OFF
Крышка - Cover
Кольцо – Ring
Взрыв – Explosion
ГОСТ 9833-73 – GOST 9833-73
Сплав АК-12 – Alloy AK-12
ГОСТ 1583-93- GOST 1583-93
Стекло приборное – Instrument glass
Герметик-прокладка – Sealant filling
Чертеж средств взрывозащиты. Рисунок А.7 – Explosion protection means diagram. Figure A.7

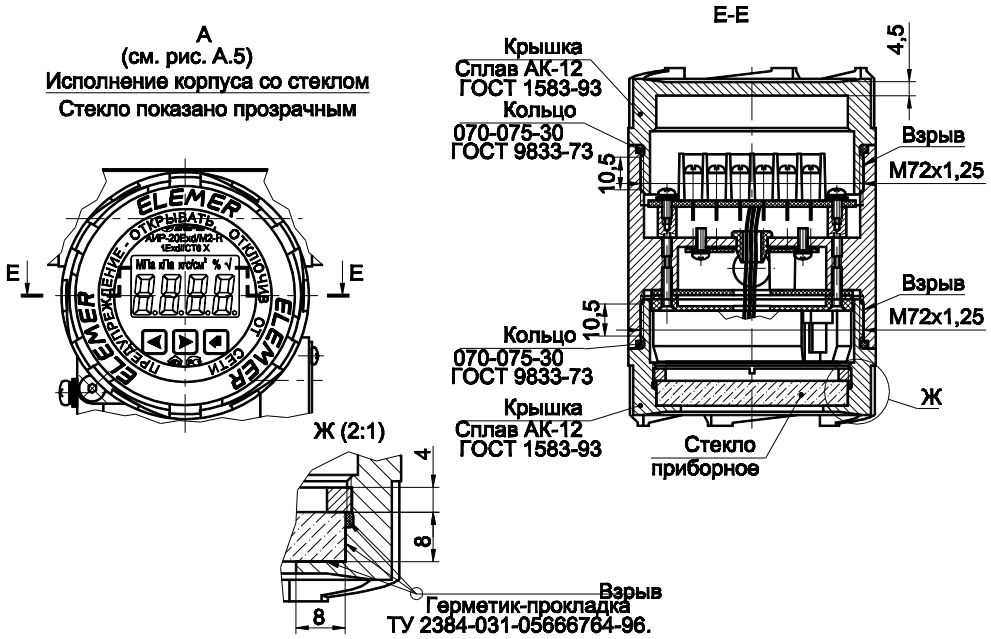

Чертеж средств взрывозащиты. Рисунок А.7

(см. рисунок А.5) – (see Figure A.5)
Для разных моделей сенсора – For different sensor models
Кольцо – Ring
Взрыв – Explosion
ГОСТ 9833-73 – GOST 9833-73
ГОСТ 1583-93- GOST 1583-93
ГОСТ 2571В-83 – GOST 2571В-83
Герметик «НОМАКОН К» – Sealant “NOMAKON K”
Грунтовка АК-070 – Priming AK-070
Чертеж средств взрывозащиты. Рисунок А.8 – Explosion protection means diagram. Figure A.8

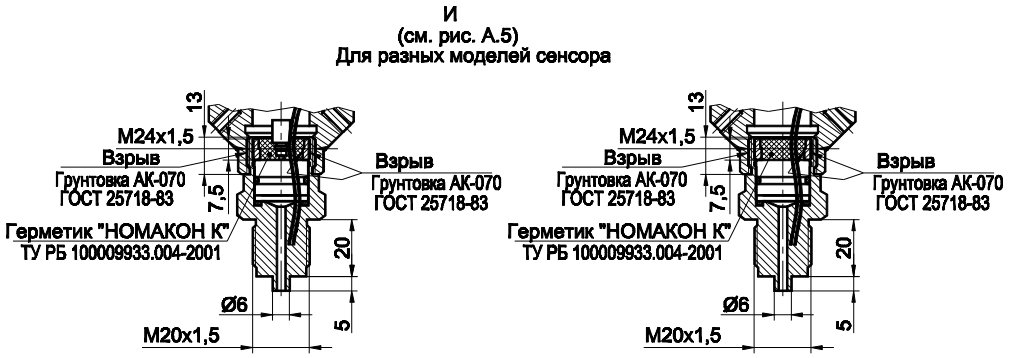

Чертеж средств взрывозащиты. Рисунок А.8

Appendix A continued

Process connection variants for AH-03 housing

Models 410, 420, 440, 460, 470

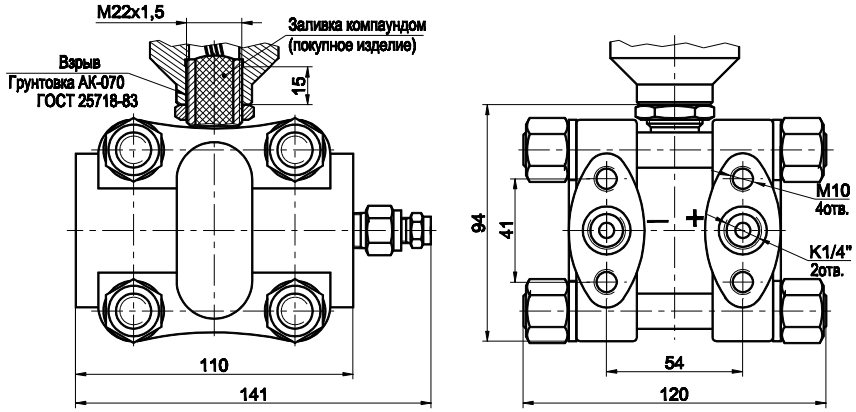

Чертеж средств взрывозащиты. Рисунок А.9

Заливка компаундом (покупное изделие) – Filling with compound (purchased product)
Взрыв – Explosion
ГОСТ 2571В-83 – GOST 2571B-83
Грунтовка АК-070 – Priming АК-070
4 отв. – 4 holes
2 отв. – 2 holes
Чертеж средств взрывозащиты. Рисунок А.9 – Explosion protection means diagram. Figure A.9

Models 400, 410, 420, 440, 460

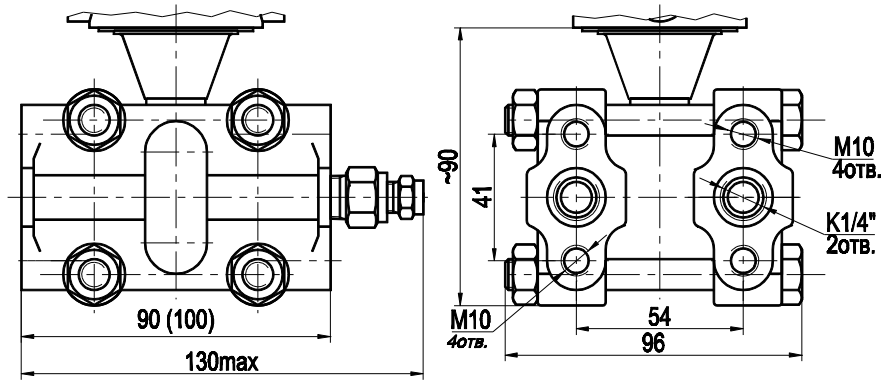

4 отв. – 4 holes
2 отв. – 2 holes

Appendix A continued

Process connection variants for AH-03 housing (place B)

Model 400

4 отв. – 4 holes
2 отв. – 2 holes

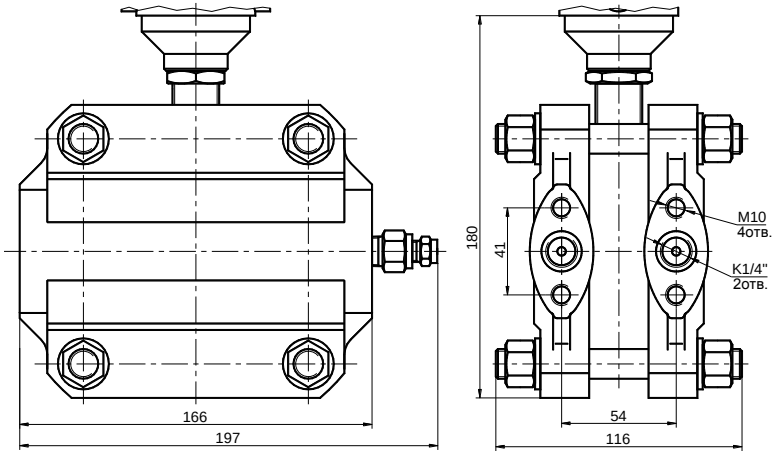

Models 620, 640

8 отв. – 8 holes

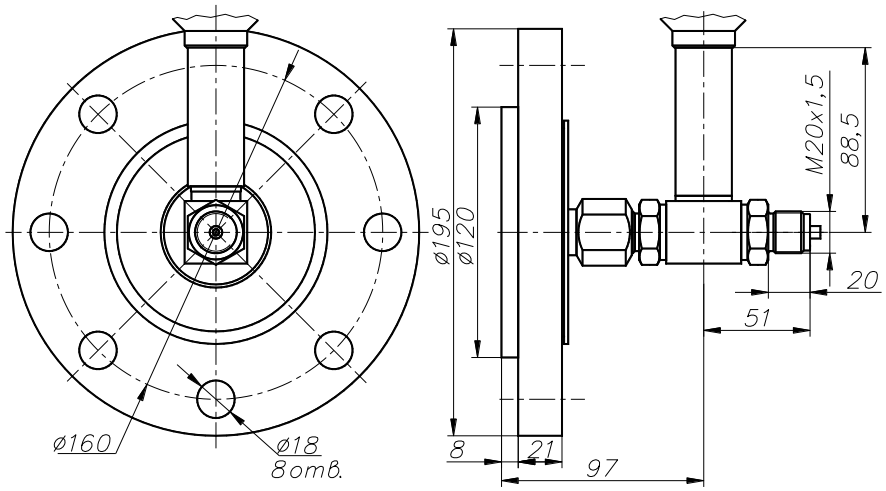

Figure A.10

Appendix A continued

Process A connection variants
AIR-20/M2-N-HP model 5x0
(place B)

Variant 1 Variant 2 Variant 3 Variant 4

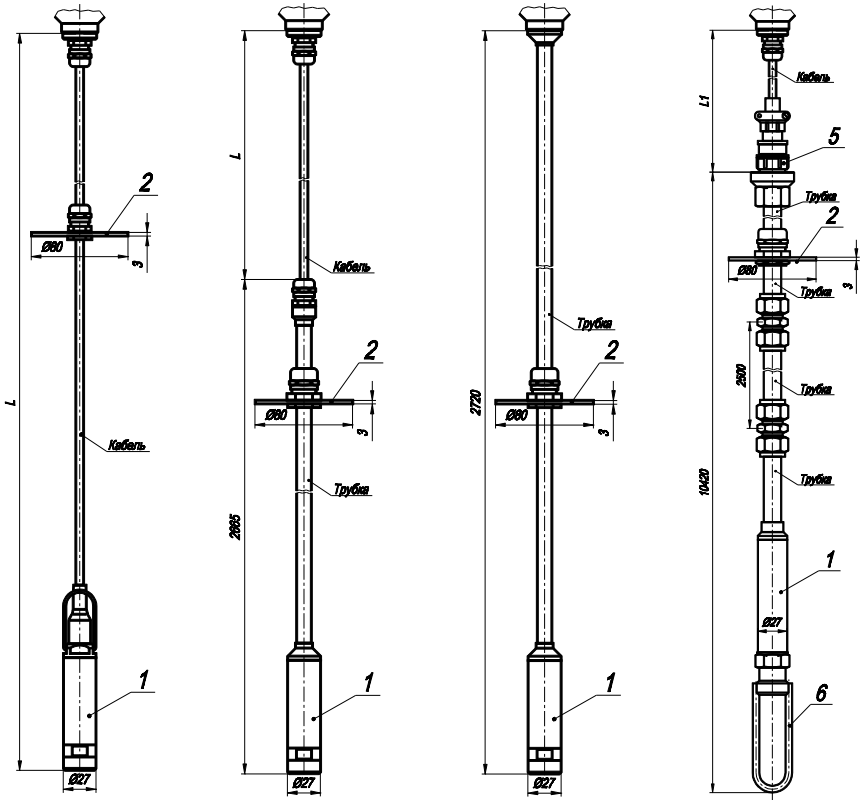

Кабель – Cable
Трубка – Tube

Appendix A continued

Кабель – Cable
Трубка – Tube

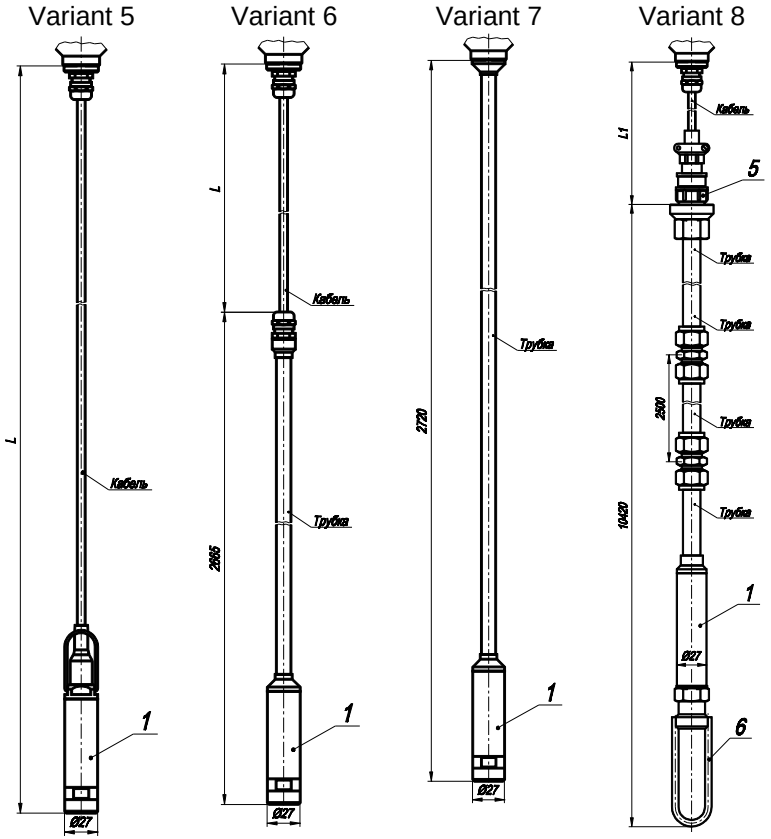

Appendix A continued

Variant 9 Variant 10 Variant 11 Variant 12

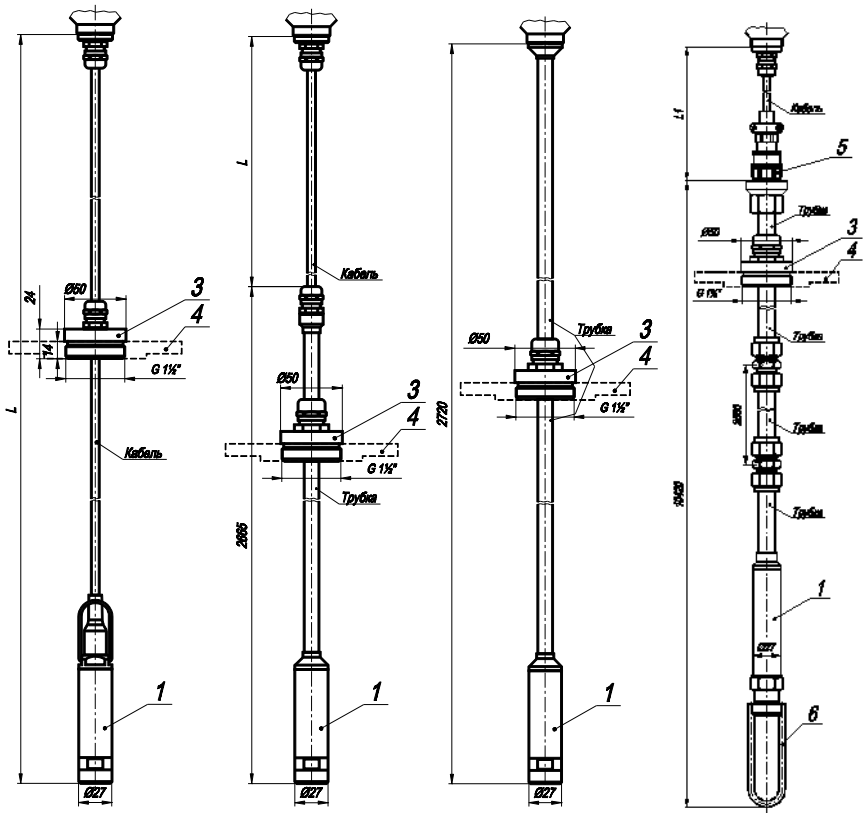

Кабель – Cable
Трубка – Tube

Кабель – Cable
Металлорукав – Metal hose

Appendix A continued

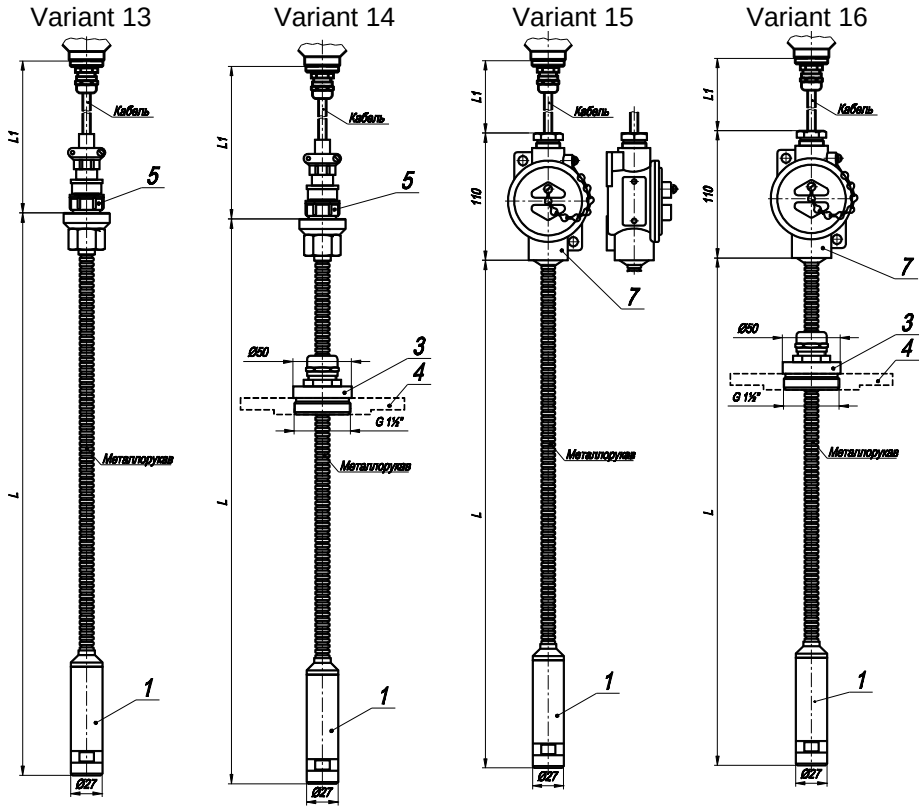

1 - Probe with sensor.
2 - Bearing disc.
3 - AdjusTable plug.
4 - Flange Du 50.
5 - Connector.
6 - Protection clamp.
7 - Housing with terminal connector block.

Appendix A continued

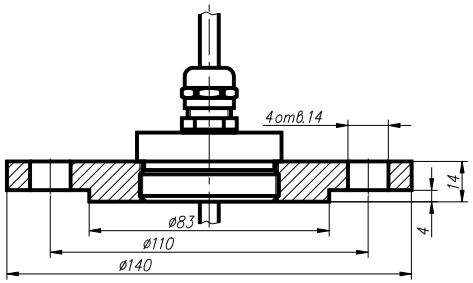

4 отв. – 4 holes

Flange dimensions correspond to flange 4-50-1.0 GOST 12820

Model code	Configuration variants	L, mm (m)
520	1-16	2500 (2.5)
530	1, 4, 5, 8, 9, 12, 13-16	10000 (10)
540	1, 5, 9, 13-16	250000 (25)

N o t e s
1 Cable length L can be changed as per order but no more than 30 m.
2. L1 – basic configuration 1.5 m.

Figure A.11

Appendix A continued

Table A.1 – Connection dimensions
(Place B - see Figures A.1-A.2)

Overview and dimensions	Model
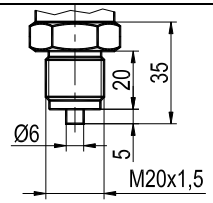	xx0
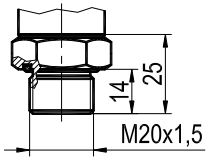	xx1
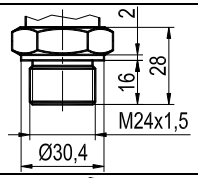	
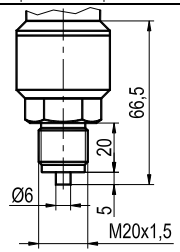	xx5
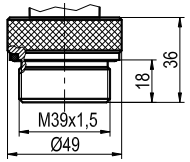	xx2
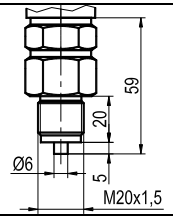	xx9

APPENDIX B

Differential pressure transmitters AIR-20/M2-H

Example identification record when ordering

1. AIR-20Ex/M2-H– DP – 440 – - – 12V – A3I1 – t1070 – S05 – 0…25 kPa – 25 MPa – 42√ – PGM
   1 2 3 4 5 6 7 8 9 10 11 12 13 14

- K1+ – BR – NM-10/U KP3 – S5FF – Y(A30) – 360P – GP – TU 4212-064-13282997-05
  15 16 17 18 19 20 21 22 23

1. Transmitter type
2. Configuration type (Table 2.1)

   Basic configuration - general purpose industrial

3. Modification code
4. Measured pressure type (transmitter type:
   - absolute - AP
   - excess - EP
   - expansion pressure - ExpP
   - excess expansion pressure - EEP
   - differential - DP
   - hydrostatical - HP
5. Model code (Table 2.7).

   For 5x0 models the configuration variant, cable length (meters) and cable material code (U – polyurethane, P – fluoropolymer) should be additionally specified, e.g. **520/ 1/ 4U** (Figure A.11)
6. Safety classes codes for instruments when ordering A or AEx:
   - 2, 2NC, 2C, 2N, 3, 3NC, 3C, 3N (with acceptance by certified institutions)
   - 4 (without acceptance).
7. Configuration identification codes of materials (Tables2.14, 2.16, 2.17)

   Basic configuration indicated in Table 2.16

8. Housing configuration code and indication configuration code (Tables 2.2, 2.3)

   Basic configuration indicated in Table 2.3

9. Climatic configuration code: (Table 2.6)

   Basic configuration – code t1070

10. Accuracy class code (Tables 2.8, 2.9)

    Basic configuration – code C05

11. Measurement range (subrange within the limits of maximum measurement range is indicated in Table 2.7) and measurement units (Pa, kPa, MPa, kgf/cm^2, kgf/m^2, mm Hg, mm H2O, mbar., bar., atm.)

    Factory setting - maximum measurement range and measurement units in accordance with Table 2.7.
12. Maximum operating excess pressure (Table 2.7) indicated for differential pressure transmitters only

    Basic configuration – minimum pressure

13. Output signal code (Table 2.4)

    Basic configuration – code 42

14. Codes of electric connections variants (Table B.1 of Appendix B)

    Basic configuration дor AH-02 – code GSP,
    for AH-03 – code C,
    for AIR-20Exd/M2-H - code K-13
15. Power supply connection polarity code (only for connectors with codes SR14, SR22, PLT164, GSP):

"K1-" – contact 1 - "minus" of power supply (connection of "Saphire" type sensors)
"K1+" – contact 1 - "plus" of power supply (connection of "Saphire" type sensors)

Basic configuration – code "K1-"

16. Presence of key fob for hermetic contact relay ***(option "BR")***
17. Presence of HART-modem with software ***(option)***
    - HM-10/U
18. Mounting support code (***option "KR"*** - Table B.3)
19. Mounting parts kit for process connection (***option*** - Table B.2)
20. Installation of valve block on AIR-20/M2-N and pressuring ***(option "U (XXX)"*** - Table B.4) or phase separator (Table B.5). When installing phase separator only vacuum filling method with individually matched oil is used.
21. Subsidiary bench tests within 360 h ***(option "360P")***
22. Verification (order index GP). If "Installation on phase separator transmitters" option selected in p. 20 of ordering form, the complement calibration protocol "instrument + phase separator" is attached additionally.
23. Designations of technical conditions

WARNING! The following positions are obligatory for filling. 1, 3, 4, 135

All unfilled positions will be considered as basic options.

Example of minimum filling of the ordering form:

AIR-20/M2-H-EP-160

ORDER EXAMPLE

Configuration with options:

Example 1

AIR-20Ex/M2-H – DP – 440 – — – 12V – A3I1 – t1070 – S05 – 0…25 kPa – 25 MPa – 42√ –
1 2 3 4 5 6 7 8 9 10 11 12 13

PGM –- K1- – BR – HM-10/U - KR3 – S5FF – Y(A30) – 360P – GP – TU 4212-064-13282997-05
14 15 16 17 18 19 20 21 22 23

Example 2

AIR-20/M2-H – EP – 160 – — – 12V – A2I1 – t1070– S05 – 0…1.6 MPa – — 42 – KVM-16 –
1 3 4 5 6 7 8 9 10 11 12 13 14

K1- – BR – HM-10/U - KR1A2 – T7F – Y(E12) – 360P - GP – TU 4212-064-13282997-05
15 16 17 18 19 20 21 22 23

Example 3

AIR-20Ex/M2-H – HP – 520/1/4U – — – 12V – A3I2 – t1070– V02 – 0…100kPa – — 42 – PGM –
1 2 3 4 5 6 7 8 9 10 11 12 13 14

- – BR – HM-10/U – KR2 – T7F – - – 360P - GP – TU 4212-064-13282997-05
15 16 17 18 19 20 21 22 23

N o t e – If filed is left unfilled, the transmitter will be supplied in basic configuration.

Appendix B continued

Table B.1 – Codes of electric connectors variants
(Place A – see Figures A.1 - A.2)

Code when ordering	Name	Overview and dimensions	Degree of protection as per GOST 14254-96	Housing type	Configuration type
SR14	Plug 2RMG-14	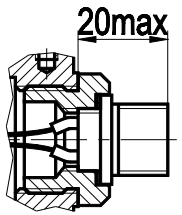	IP54	AH-02	OP Ex. A
		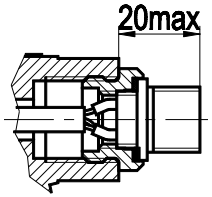		AH-03	
SR22	Plug 2RMG-22	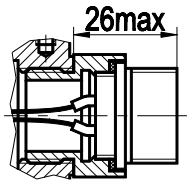		AH-02	
		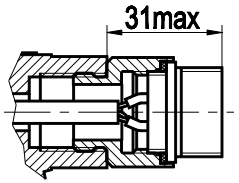		AH-03	

Appendix B continued

Table B.1 continued

Code when ordering	Name	Overview and dimensions	Degree of protection as per GOST 14254-96	Housing type	Configuration type
GSP	Plug GSP-311	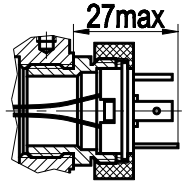	IP65	AH-02	OP, Ex, A
		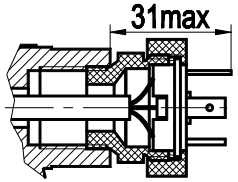		AH-03	
PLT	Plug PLT -164-R	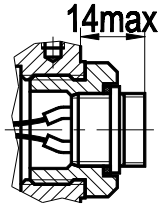	IP54	AH-02	
		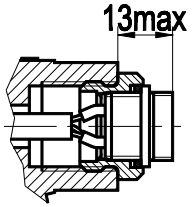		AH-03	

Appendix B continued

Table B.1 continued

Code when ordering	Name	Overview and dimensions	Degree of protection as per GOST 14254-96	Housing type	Configuration type
S	Gland entry G 1/2"	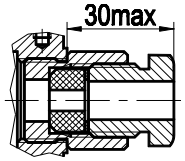	IP65	AH-02	OP, Ex, A
		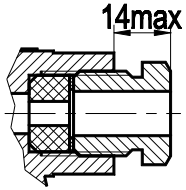		AH-03	
PGK or PGM	Cable input FBA21-10 (metal, cable ø6,5…10.5) or VG-NPT1/2" 6-12-K68 (cable ø6…12)	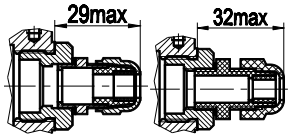		AH-02	
		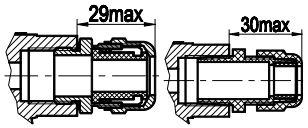		AH-03	
KVM-15	Cable input for metal hose MGP15 in PVC envelope 15 mm (D_{outer}=20.6 mm; D_{inner}=13.9 mm).	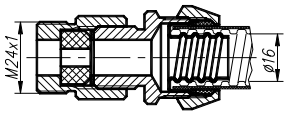		AH-02	
		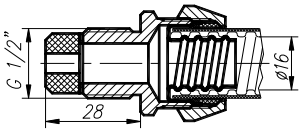		AH-03	

Appendix B continued

Table B.1 continued

Code when ordering	Name	Overview and dimensions	Degree of protection as per GOST 14254-96	Housing type	Configuration type
KVM-16	Cable input for metal hose MG16 (D_{outer}=22.3 mm; D_{inner}=14.9 mm). Connector SG-16-N-M20x1.5	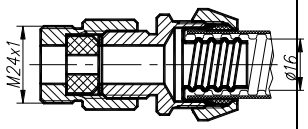	IP65	AH-02	OP, Ex, A
		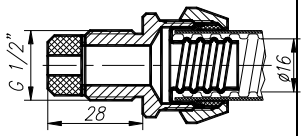		AH-03	
KVM-22	Cable input for metal hose MG22 (D_{outer}=28.4 mm; D_{inner}=20.7 mm). Connector SG-22-N-M25x1.5	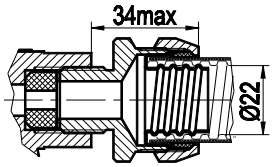		AH-03	
KVP-16	Cable input for plastic hose. Corrugated pipe PVC 16 mm	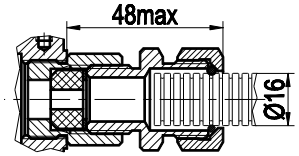		AH-02	
		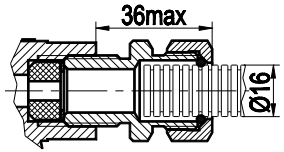		AH-03	
KVP-20	Cable input for plastic hose. Corrugated pipe PVC 20 mm	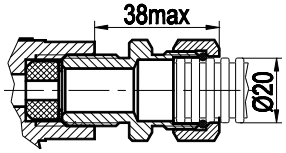		AH-03	

Appendix B continued

Table B.1 continued

Code when ordering	Name	Overview and dimensions	Degree of protection as per GOST 14254-96	Housing type	Configuration type
K-13	Cable input for unarmored cable Ø6…13 and for armored (shielded) cable Ø 6…10 with armor (shield) Ø 10…13	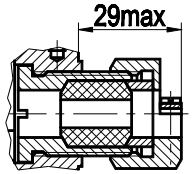	IP65	AH-02	OP, Ex, A, Exd, Exdia
		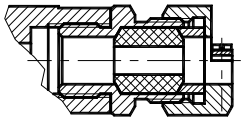		AH-03	
KB-13	Cable input for armored (shielded) cable Ø6…10 with armor (shield) Ø10…13 (D = 13.5)	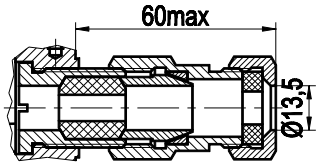		AH-02	
		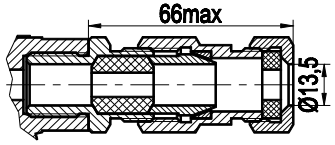		AH-03	
KB-17	Cable input for armored (shielded) cable Ø6…13 with armor (shield) Ø10…17 (D = 17.5)	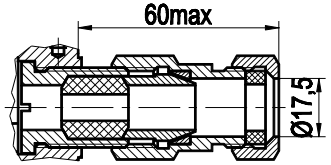		AH-02	
		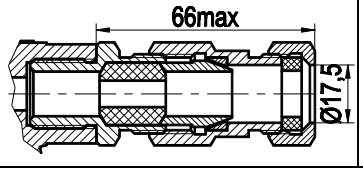		AH-03	

Appendix B continued

Table B.1 continued

Code when ordering	Name	Overview and dimensions	Degree of protection as per GOST 14254-96	Housing type	Configuration type
KT-1/2	Cable input for un-armored cable Ø6…13 with pipe thread G 1/2"	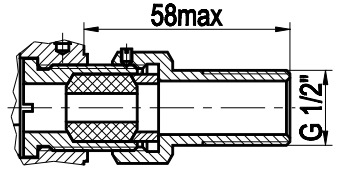		AH-02	OP, Ex, A, Exd, Exdia
		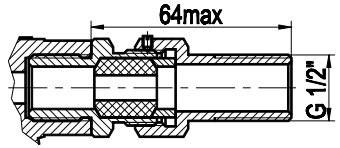		AH-03	
KT-3/4	Cable input for un-armored cable Ø6…13 with pipe thread G 3/4"	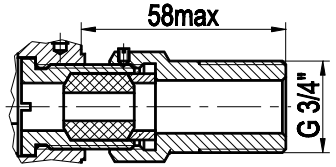		AH-02	
		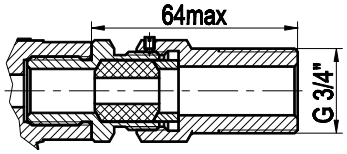		AH-03	
KVM-15In	Cable input for metal hose MGP15 in PVC envelope 15 mm (D_{outer}=20.6 mm; D_{inner}=13.9 mm).	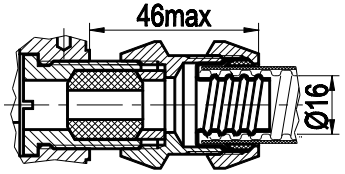		AH-02	
		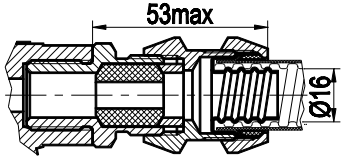		AH-03	

Appendix B continued

Table B.1 continued

Code when ordering	Name	Overview and dimensions	Degree of protection as per GOST 14254-96	Housing type	Configuration type
KVM-16In	Cable input for metal hose MGP15 in PVC envelope 15 mm (D_{outer}=20.6 mm; D_{inner}=13.9 mm).	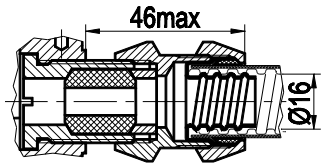	IP65	AH-02	OP, Ex, A, Exd, Exdia
		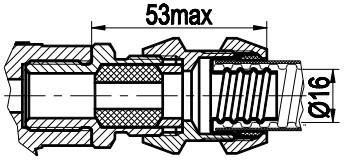		AH-03	
KVM-22In	Cable input for metal hose MG22. Connector SG-22-N-M25x1.5mm (D_{outer}=28.4 mm; D_{inner}=20.7 mm).	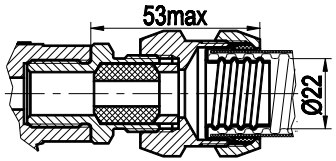		AH-03	

Appendix B continued

Table B.2- Mounting parts kit (MPK) code

Code when ordering	MPK contents	Figure
T1F T1M	Filling.	
T2F T2M	M20x1.5 to outer thread M12x1.5 adapter. Filling.	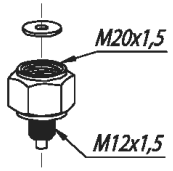
T2F T3M	M20x1.5 to inner thread K1/4”(1/4”NPT) adapter. Filling.	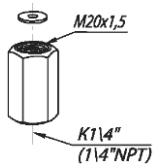
T4F T4M	M20x1.5 to inner thread K1/2”(1/2”NPT) adapter. Filling.	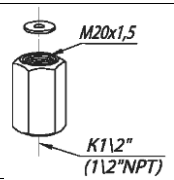
T5F T5M	M20x1.5 to outer thread K1/4”(1/4”NPT) adapter. Filling.	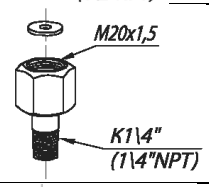
T6F T6M	M20x1.5 to outer thread K1/2”(1/2”NPT) adapter. Filling.	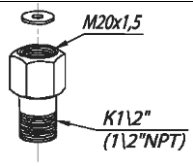
T7F, T7FU or T7M, T7MU	Nut M20x1.5. Nipple. Filling.	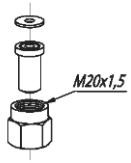

Appendix B continued

Table B.2 continued

Code when ordering	MPK contents	Figure
T8 T8U	Lug M20x1.5. O-ring.	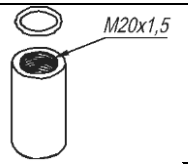
T9 T9U	Lug M24x1.5. O-ring.	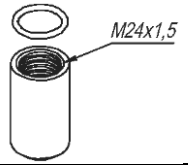
T11 T11U	Lug G1/2”. O-ring.	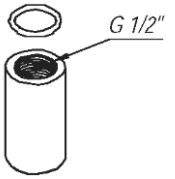
T10 T10U	Lug M39x1.5. O-ring.	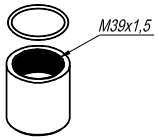
S1R S1F	Two mounting flanges with K1/4” (1/4”NPT) thread hole. Two O-rings. Fastener.	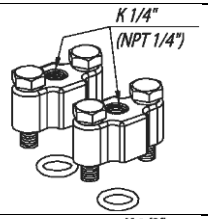
S2R S2F	Two mounting flanges with K1/2” (1/2”NPT) thread hole. Two O-rings. Fastener.	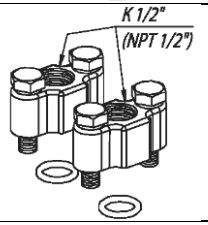

Table B.2 continued

Code when ordering	MPK contents	Figure
S3R S3F	Two mounting flanges with K1/4” (1/4”NPT) barrel fitting. Two O-rings. Fastener.	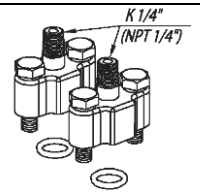
S4R S4F	Two mounting flanges with K1/2” (1/2”NPT) barrel fitting. Two O-rings. Fastener.	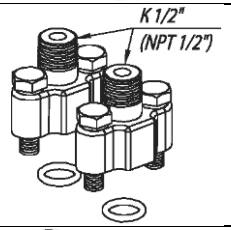
S5RF S5RFU or S5FF, S5FFU or S5RM, S5RMU or S5FM, S5FMU	Two mounting flanges with M20x1,5 barrel fitting. Two O-rings. Two nuts M20x1.5. Two nipples Two fillings. Fastener.	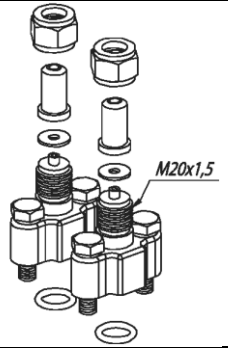

N o t e s

1 Letter F or M in Txx code represents filling material: fluoropolymer F-4UV15 (to a pressure of 16 MPa) or copper M1 (to a pressure above 16 MPa) respectively.

2 Letters R or F on the 3rd position in Sxxx code represents O-ring material: rubber or fluoropolymer; letters F or M on the 4th position represents filling material: fluoropolymer (F) or copper (M).

3 Letter U in the end of the code represents nipple and lug material, carbon steel. If letter is absent the material is 12H18N10T.

Appendix B continued

Table B.3 – Mounting supports code

Code when ordering	Support name	Figure
KR1A2	Support KR1 (for AH-02 housing)	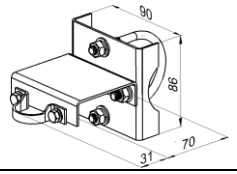
KR2	Support KR2 (for AH-03 housing)	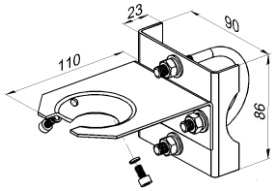
KR3	Support KR3	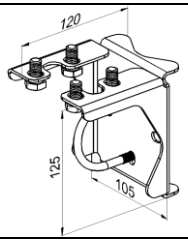
KR4	Support KR4	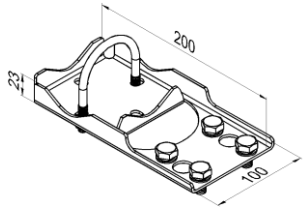
KR5	Support KR5	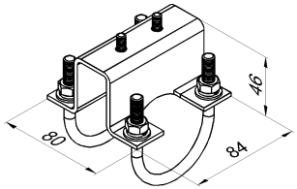

Appendix B continued

AIR-20/M2-H mounting example with valve blocks.
(BK-S30 is shown for the example)

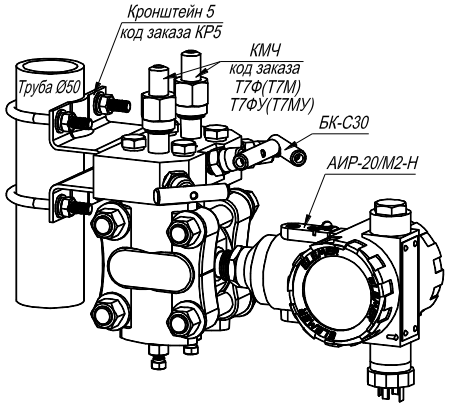

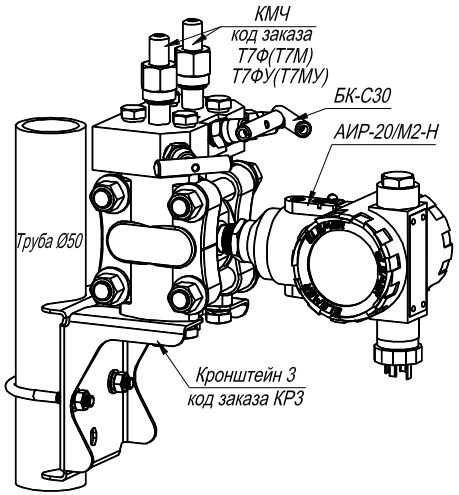

Кронштейн – Support
Труба – Pipe
код заказа – order code
КМЧ – MPK

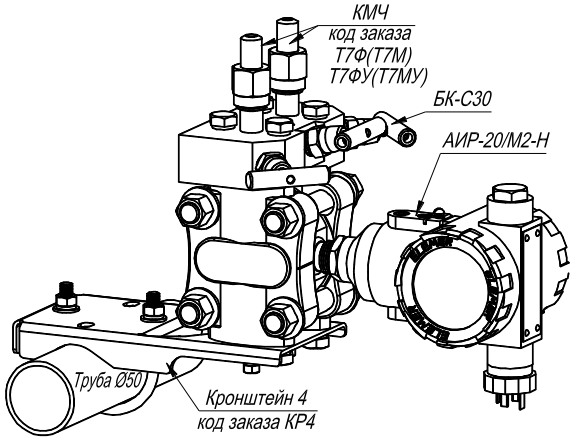

Appendix B continued

Table B.4 –Installation of valve block ELEMER-BK-xxx and pressing Y(xxx)

Valve block	Code when ordering	Use
ELEMER-BK-A30	Y(A30)	AIR-20/M2-N-DP
ELEMER-BK-A52	Y(A52)	AIR-20/M2-N-DP
ELEMER-BK-S20	Y(C20)	AIR-20/M2-N-DP
ELEMER-BK-C30	Y(C30)	AIR-20/M2-N-DP
ELEMER-BK-C52	Y(C52)	AIR-20/M2-N DP
ELEMER-BK-E10	Y(E10)	AIR-20/M2-N-EP/AP/ExpP/EEP
ELEMR-BK-E12	Y(E12)	AIR-20/M2-N-EP/AP/ExpP/EEP
ELEMER-BK-E22	Y(E22)	AIR-20/M2-N-EP/AP/ExpP/EEP

Table B.5 – Installation of phase separators

No.	Phase separator name	Code when ordering	Code when ordering phase separator with capillary line*	Additional error γ_1, contributed by phase separator, % от P_{BMAX}***	Adjustment of operating pressures, MPa**
1	**Type BA** phase separator with fitting or flange connection	**BA**	**BA / L**	**0.2**	-0.1…60
2	**Type B** phase separator with fitting connection	**B**	**B / L**	**0.0 -** at P_B≥60kPa	-0.1…35
3	**Type** BH phase separator with fitting connection	**BH**	**BH/ L**	**0.2 -** at P_B≤600kPa **0.0 -** at P_B≤600kPa	0…70
4	**Type** BF phase separator with flange connection	**BF**	**BF / L**	**0.0 -** at P_B≥60kPa	-0.1…20
5	**Type INR** phase separator with fitting or flange connection	**INR**	**INR / L**	**0.5**	-0.1…10
6	**Type W** phase separator with fitting connection	**W**	**W / L**	**0.0**	-0.1…25
7	**Type BW** phase separator with fitting connection	**BW**	**BW / L**		-0.1…60
8	**Type WA** phase separator with fitting connection	**WA**	**WA / L**		0.1…60
9	**Type** WD phase separator with flange connection	**WD**	**WD / L**		-0.1…25
10	**Type** WF phase separator with flange connection	**WF**	**WF / L**		-0.1…25
11	**Type** WT phase separator with flange connection	**WT**	**WT / L**		0…25
12	**Type WS** phase separator **-**milk nut	**WS**	**WS / L**		0…4

N o t e s

1 - * For the correct order of phase separator and capillary line it is necessary to use the complete order form (see catalog "Armature" or section "Armature - Phase separators (capillary lines)" onwww.elemer.ruwebsite).

2 - In order to connect AIR-20/M2-H to verification equipment, the counterpart (adapters or flanges) can be ordered with phase separator (see catalog "Armature" or section "Armature - Phase separators (capillary lines)" onwww.elemer.ru website).

3 - ** Maximum operating range for this separator type is indicated. Operating pressure range for the chosen separator is indicated in phase separator order form.

4 - *** To readjust AIR-20/M2-H with installed separators to other measurement range it is necessary to adjust upper and lower measurement limits**.**

APPENDIX C

Table C.1 — Universal and general practice command list for AIR-20/M2-H

Number of HART-command and its assignment	Received data			Sent data			Error code	Note
	Number	Type	Description	Byte number	Type	Description		
No. 0 Reading instrument type, version, factory number and other data over short address				0	Unsigned-8	"254"		
				1-2	Enum	Extended instrument type		
				3	Unsigned-8	Minimum number of preambles from control devices to instrument		
				4	Unsigned-8	Protocol version		
				5	Unsigned-8	Instrument version		
				6	Unsigned-8	Software version		
				7	Unsigned-5	Version of electronic modules		
				7	Enum	Physical interface type		
				8	Bits	Additional data flags		
				9-11	Unsigned-24	Instrument factory number		
				12	Unsigned-8	Maximum number of preambles from instrument to control devices		
				13	Unsigned-8	Maximum number of instrument variables		
				14-15	Unsigned-16	Configuration changes counter		
				16	Bits	Extended instrument status		
				17-18	Enum	Manufacturer code		
				19-20	Enum	Distributor code		
				21	Enum	Instrument profile		
No. 1 Reading pressure and current measurement units				0	Enum	Current pressure measurement units		
				1-4	Float	Pressure value in current measurement units		
No. 2 Reading loop current value in mA and percentage of current range				0-3	Float	Loop current (mA)		
				4-7	Float	Percentage of current range		
No. 3 Reading values dynamic variables of: pressure, sensor temperature, instrument temperature, loop current and measurement units				0-3	Float	Loop current (mA)		
				4	Enum	Current pressure measurement units		
				5-8	Float	Pressure value in current measurement units		
				9	Enum	Measurement units of sensor temperature (ºC)		

Appendix C continued

Table C.1 continued

1	2	3	4	5	6	7	8	9
				10-13	Float	Sensor temperature, ºC		
				14	Enum	Measurement units of instrument temperature (ºC)		
				15-18	Float	Instrument temperature, ºC		
No. 6 Writing short address and current loop function mode	0	Unsigned-8	Short address	0	Unsigned-8	Short address	2 – incorrect short address (>63) 5 – request byte number mismatches the requested number 7 – write protection	
	1	Enum	Current loop function mode	1	Enum	Current loop function mode		
No. 7 Reading polling address and current loop function mode				0	Unsigned-8	Short address		
				1	Enum	Current loop function mode		
No. 8 Reading dynamic variable types				0	Enum	Primary variable type		
				1	Enum	Secondary variable type		
				2	Enum	Third variable type		
				3	Enum	Not used		
No. 9 Reading instrument dynamic variables and their status	0	Unsigned-8	Position 1. Instrument variable code	0	Bits	Extended instrument status	2 – incorrect dynamic variable code received 5 – request byte number mismatches the requested number	* By instru-ment variable it is meant any of dynamic variables (see HART-protocol specification), or % of range, or output current in mA
	1	Unsigned-8	Position 2. Instrument variable code	1	Unsigned-8	Position 1. Instrument variable code*		
	2	Unsigned-8	Position 3. Instrument variable code	2	Enum	Position 1. Instrument variable type		
	3	Unsigned-8	Position 4. Instrument variable code	3	Enum	Position 1. Current instrument variable measurement units		
	4	Unsigned-8	Position 5. Instrument variable code	4-7	Float	Position 1. Variable value in current measurement units		

Appendix C continued

Table C.1 continued

1	2	3	4	5	6	7	8	9
	5	Unsigned-8	Position 6. Instrument variable code	8	Bits	Position 1. Instrument variable condition		
	6	Unsigned-8	Position 7. Instrument variable code	9	Unsigned-8	Position 2. Instrument variable code*		Number of received bytes of request (position) data for this command can have any value from 1 to 8. Accordingly, the instrument deliver in its response (position) only response bytes that were request-ed. (see HART-protocol specification)
	7	Unsigned-8	Position 8. Instrument variable code	10	Enum	Position 2. Instrument variable type		
				11	Enum	Position 2. Current instrument variable measurement units		
				12-15	Float	Position 2. Variable value in current measurement units		
				16	Bits	Position 2. Instrument variable condition		
				17	Unsigned-8	Position 3. Instrument variable code*		
				18	Enum	Position 3. Instrument variable type		
				19	Enum	Position 3. Current instrument variable measurement units		
				20-23	Float	Position 3. Variable value in current measurement units		** By time it is meant the integer unsigned 4-byte number, whose least significant bit corresponds to a time of 1/32 msec (see HART-protocol)
				24	Bits	Position 3. Instrument variable condition		
				…	…	…		
				57	Unsigned-8	Position 8. Instrument variable code*		
				58	Enum	Position 8. Instrument variable type		

Appendix C continued

Table C.1 continued

1	2	3	4	5	6	7	8	9
				59	Enum	Position 8. Current instru-ment variable measurement units		
				60-63	Float	Position 8. Variable value in current meas-urement units		
				64	Bits	Position 8. Instrument variable condition		
				65-68	Time**	Time mark		
No. 11 Reading instrument type, ver-sion, factory number and other data over header (tag)	0-5	Packed (4 bytes in 3)	Header	See comman d No. 0	See command No. 0	See command No. 0		
No. 12 Reading user message				0-23	Packed	User message		
No. 13 Reading header, description and date				0-5	Packed	Header		
				6-17	Packed	Description		
				18-20	Date	Date		
No. 14 Reading sensor data				0-2	Unsigned-24	Sensor factory number		
				3	Enum	Measurement units for limits and minimum range		
				4-7	Float	Upper limit		
				8-11	Float	Lower limit		
				12-15	Float	Minimum range		
No. 15 Reading instrument data				0	Enum	Emergency level of primary variable (low/high)		
				1	Enum	Transmitter function type (linear, square root)		

Appendix C continued

Table C.1 continued

1	2	3	4	5	6	7	8	9
				2	Enum	Measurement units for lower and upper measurement range		
				3-6	Float	Lower limit of main variable measurement		
				7-10	Float	Upper limit of main variable measurement		
				11-14	Float	Damping time (s)		
				15	Enum	Write protection mode		
				16	Enum	"250"		
				17	Bits	Analog channel flags		
No. 16 Reading build numbe				0-2	Unsigned-24	Build number		
No. 17 Writing user message	0-23	Packed	User message	0-23	Packed	User message	5 – request byte number mismatches the re-quested number 7 – write protection	
No. 18 Reading header, description and date	0-5	Packed	Header	0-5	Packed	Header	5 – request byte number mismatches the re-quested number 7 – write protection	
	6-17	Packed	Description	6-17	Packed	Description		
	18-20	Date	Date	18-20	Date	Date		
No.19 Writing final build num-ber. Reply message returns the received one	0-2	Unsigned-24	Build number	0-2	Unsigned-24	Build number	5 – request byte number mismatches the re-quested number 7 – write protection	
No. 20 Reading long header	0-31	ISO Latin-1	Long header	0-31	ISO Latin-1	Long header		
No. 21 Reading instrument type, ver-sion, factory number and other data over	0-31	ISO Latin-1	Long header	See comman d No. 0	See command No. 0	See command No. 0		

Appendix C continued

Table C.1 continued

1	2	3	4	5	6	7	8	9
long header								
No. 22 Writing long header	0-31	ISO Latin-1	Long header	0-31	ISO Latin-1	Long header		
No. 34 Writing damping time	0-3	Float	Damping time	0-3	Float	Damping time	3 – received parameter is below accepted value 4 – received parameter is above accepted value 5 – request byte number mis-matches the requested number 7 – write protection	
No. 35 Writing pressure transfor-mation limits and their measure-ment units into current	0	Unsigned-8	Measurement units	0	Unsigned-8	Measurement units	2 – incorrect measurement units received 5 – request byte number mis-matches the requested number 7 – write protection 9 – lower transformation limit is above accepted range 10 – lower transformation limit is below accepted range 11 – upper transformation limit is above accepted range 12 – upper transformation limit is below accepted range 14 – minimum range is too low	Minimum output current value in mA is put in corre-spondence with lower transformation limit; maximum value is put in correspond-ence with upper trans-formation limit
	1-4	Float	Upper transofrmation limit	1-4	Float	Upper transofrmation limit		
	5-8	Float	Lower transofrmation limit	5-8	Float	Lower transofrmation limit		

Appendix C continued

Table C.1 continued

1	2	3	4	5	6	7	8	9
No. 36 Writing upper pressure transformation limit equal to current pressure value							7 – write protection 9 – current pressure is above upper sensor limit 10 – current pressure is below sensor lower sensor limit 29 – range is too low	
No. 37 Writing lower pressure transformation limit equal to current pressure value							7 – write protection 9 – current pressure is above upper transformation limit 10 – current pressure is below sensor lower transformation limit	
No. 38 Resetting the primary configuration flag, if configuration change counters in control device and the instrument are the same	0-1	Unsigned-16	Configuration change counter	0-1	Unsigned-16	Configuration change counter	7 – write protection 9 – values of received configuration change counter and the instrument do not match	
No. 40 Writing fixed loop current value (in mA)	0-3	Float	Loop current	0-3	Float	Loop current	3 – current amount is above maximum possible value in the current mode 4 – current amount is below minimum possible value in the current mode 5 – request byte number do not match	

Appendix C continued

Table C.1 continued

1	2	3	4	5	6	7	8	9
							the required number 7 – write protection 11 – current output is off	
No. 41 Self-testing								
No. 42 Rebooting								
No. 43 Writing sensor's zero							7 – write protection 9 – current pressure is above the upper limit when zero can be set 10 – current pressure is below the lower limit when zero can be set	
No. 44 Writing pressure value meas-urement units	0	Enum	Measurement units	0	Enum	Measurement units	2 – incorrect measurement units received 5 – request byte number mismatches the requested number 7 – write protection 16 – access restricted	
No. 47 Writing the type of Main variable transfor-mation function	0	Enum	Output characteristic type	0	Enum	Output characteristic type	2 – incorrect output characteristic type received 5 – request byte number mismatches the requested number 7 – write protection	
No. 48 Reading additional status	0-5	Enum	Instrument status	0-5	Enum	Instrument status***		*** AIR-20/M2-H always returns zeros in this field
	6	Bits	Extended status	6	Bits	Extended status		
	7	Bits	Fixed	7	Bits	Fixed		

Table C.1 continued

of the instrument			function			function***		**** SS – standardized status
	8	Bits	SS0 ****	8	Bits	Standardized status 0 ***		
	9	Bits	SS1					
	10	Bits	Analog output in saturation					
	11	Bits	SS2					
	12	Bits	SS3					
	13	Bits	Analog output fixed					
	14-24	Bits	Instrument status					
No. 50 Reading Table of correspond-ence of dynamic variables to instrument variables				0	Unsigned-8	Variable code 1`		Instrument variable code corresponding to dynamic variable
				1	Unsigned-8	Variable code 2`		
				2	Unsigned-8	Variable code 3`		
				3	Unsigned-8	Not used		
No. 53 Writing measure-ment units of instrument dynamic variabel	0	Unsigned-8	Dynamic variable code	0	Unsigned-8	Dynamic variable code	5 – request byte number mismatches the requested number 7 – write protection 11 – incorrect dynamic variable code received 12 – incorrect measurement units received	
	1	Enum	Measurement units	1	Enum	Measurement units		
No. 59 Writing number of preambles in instrument response	0	Unsigned-8	Number of preambles	0	Unsigned-8	Number of preambles	3 – received parameter is too high 4 – received parameter is too low 5 – request byte number mismatches the requested number 7 – write protection	
No.80 Reading previous adjustment points	0	Unsigned-8	Variable code	0	Unsigned-8	Variable code	5 – request byte number mismatches the requested number	
				1	Unsigned-8	Measurement units		
				2-5	Float	Low point		

Appendix C continued

Table C.1 continued

of instrumen variable						adjustment	17 – incorrect variable code 19 – variable code is not accepted for this command	
				6-9	Float	Upper adjustment point		
No. 81 Reading adjustment limits of instrument variable	0	Unsigned-8	Variable code	0	Unsigned-8	Variable code	5 – request byte number mismatches the requested number 17 – incorrect variable code 19 – variable code is not accepted for this command	
				1	Enum	Adjustment points types		
				2	Enum	Measurement units		
				3-6	Float	Lower limit of lower point		
				7-10	Float	Upper limit of lower point		
				11-14	Float	Lower limit of upper point		
				15-18	Float	Upper limit of upper point		
				19-22	Float	Minimum range		
No. 82 Instrument variable adjustment	0	Unsigned-8	Variable code	0	Unsigned-8	Variable code	2 – incorrect type of adjust-ment point 3 – value for adjustment is too high 4 – value for adjustment is too low 5 – request byte number mismatches the requested number	
	1	Enum	Adjustment point type	1	Enum	Adjustment point type		
	2	Enum	Measuremen t units	2	Enum	Measurement units		
	3-6	Float	Value for adjustment	3-6	Float	Value for adjustment		
							7 – write protection 9 – pressure value is too high 10 – pressure vaklue is too low 17 – incorrect variable code 19 – variable code is not accepted for this command	

Appendix C continued

Table C.1 continued

No. 83 Recovery of instrument factory settings	0	Unsigned-8	Variable code	0	Unsigned-8	Variable code	5 – request byte number mismatches the requested number 7 – write protection 17 – incorrect variable code 19 – variable code is not accepted for this command	
				4-7	Float	Calibration coefficient b		
	4-7	Float	Calibration coefficient b	4-7	Float	Calibration coefficient b		

Special command list for AIR-20/M2-N

No. 128 Reading current output parameters				0	Enum	Current output type		
				1	Enum	Error current rate		
				2-5	Float	Low level error current value		
				6-9	Float	High level error current value		
No. 129 Writing current output parameters	0	Enum	Current output type	0	Enum	Current output type	5 – request byte number mismatches the requested number 7 – write protection 11 – current output is not active (sensor is in multi-point mode) 12 – incorrect value of current output type 13 – incorrect value of error current level 14 – low level error current value is too low 15 – low level error current value is too high 16 – low level error current	
	1	Enum	Error current rate	1	Enum	Error current rate		
	2-5	Float	Low level error current value	2-5	Float	Low level error current value		
	6-9	Float	High level error current value	6-9	Float	High level error current value		

Appendix C continued

Table C.1 continued

							is too low 17 – high level error current value is too high	
No. 130 Reading parameters of square root de-pendency				0-3	Float	Linearization of square root dependency in % of the range		
				4-7	Float	Cut-off level for square root dependency in % of the range		
				8-11	Float	Hysteresis width for cut-off level in % of the range		
No. 131 Writing parameters of square root de-pendency	0-3	Float	Linearization of square root depend-ency in % of the range	0-3	Float	Linearization of square root dependency in % of the range	5 – insufficient quantity of input bytes 7 – write protection is active 8 – lineariza-tion value is to low 9 – lineariza-tion value is to high 10 – cut-off level value is too low 11 – cut-off level value is too high 12 – hystere-sis width value is too low 13 – hystere-sis width value is too high	
	4-7	Float	Cut-off level for square root depend-ency in % of the range	4-7	Float	Cut-off level for square root dependency in % of the range		
	8-11	Float	Hysteresis width for cut-off level in % of the range	8-11	Float	Hysteresis width for cut-off level in % of the range		
	1	Unsigned-8	Amount of decimals after the decimal point	1	Unsigned-8	Amount of decimals after the decimal point		
	2	Enum	Indication mode	2	Enum	Indication mode		

Appendix C continued

Table C.1 continued

No. 132 Reading indication parameters				0	Enum	Menu language (not used)		
				1	Unsigned-8	Amount of decimals after the decimal point		
				2	Enum	Indication mode		
No. 133 Writing indication parameters	0	Enum	Menu language	0	Enum	Menu language (not used)	5 – insufficient quantity of input bytes 7 – write protection mode is active 8 - incorrect value of menu language 9 - amount of decimals after the decimal point is too high 10 - incorrect indication mode	
	1	Unsigned -8	Amount of decimals after the decimal point	1	Unsigned-8	Amount of decimals after the decimal point		
	2	Enum	Indication mode	2	Enum	Indication mode		
No. 134 Reading protection parameters				0	Unsigned-16	Button menu password		
				1	Enum	Permission to set to zer by hermetic contact		
№135 Writing security parameters	0-1	Unsigned-16	Button menu password	0-1	Unsigned-16	Keyboard menu password	5 – insufficient quantity of input bytes 7 – write protection is active 8 – incorrect value of permission to set to zero by hermetic contact	
	2	Enum	Permission to set to zer by hermetic contact	2	Enum	Permission to set to zer by hermetic contact		
№136 Factory settings recovery	0	Enum	Action type	0	Enum	Action type	7 – write protection is active 8 – error recovering factory settings 9 – incorrect value of action type	Action types: 0 – command to restore factory settings, 1 – reading command execution results

Appendix C continued

Table C.1 continued

№145 Reading pressure scale offset				0-3	Float	Pressure scale offset		
№146 Writing pressure scale offset	0-3	Float	Pressure scale offset	0-3	Float	Pressure scale offset	5 – insufficient quantity of input bytes 7 – write protection mode is active 9-scale offset is too high 10- scale offset is too low	
№147 Reading current scale offset				0-3	Float	Current scale offset		
№148 Writing current scale offset	0-3	Float	Current scale offset	0-3	Float	Current scale offset	5 – insufficient quantity of input bytes 7 – write protection mode is active 9- scale offset is too high 10- scale offset is too low	

RECORD OF CHANGES

Ch.	Sheet (page) numbers				Total sheets (pages) in the document	Doc. No.	Reference No. of accompanying document and date	Signature	Date
	changed	replaced	new	void					